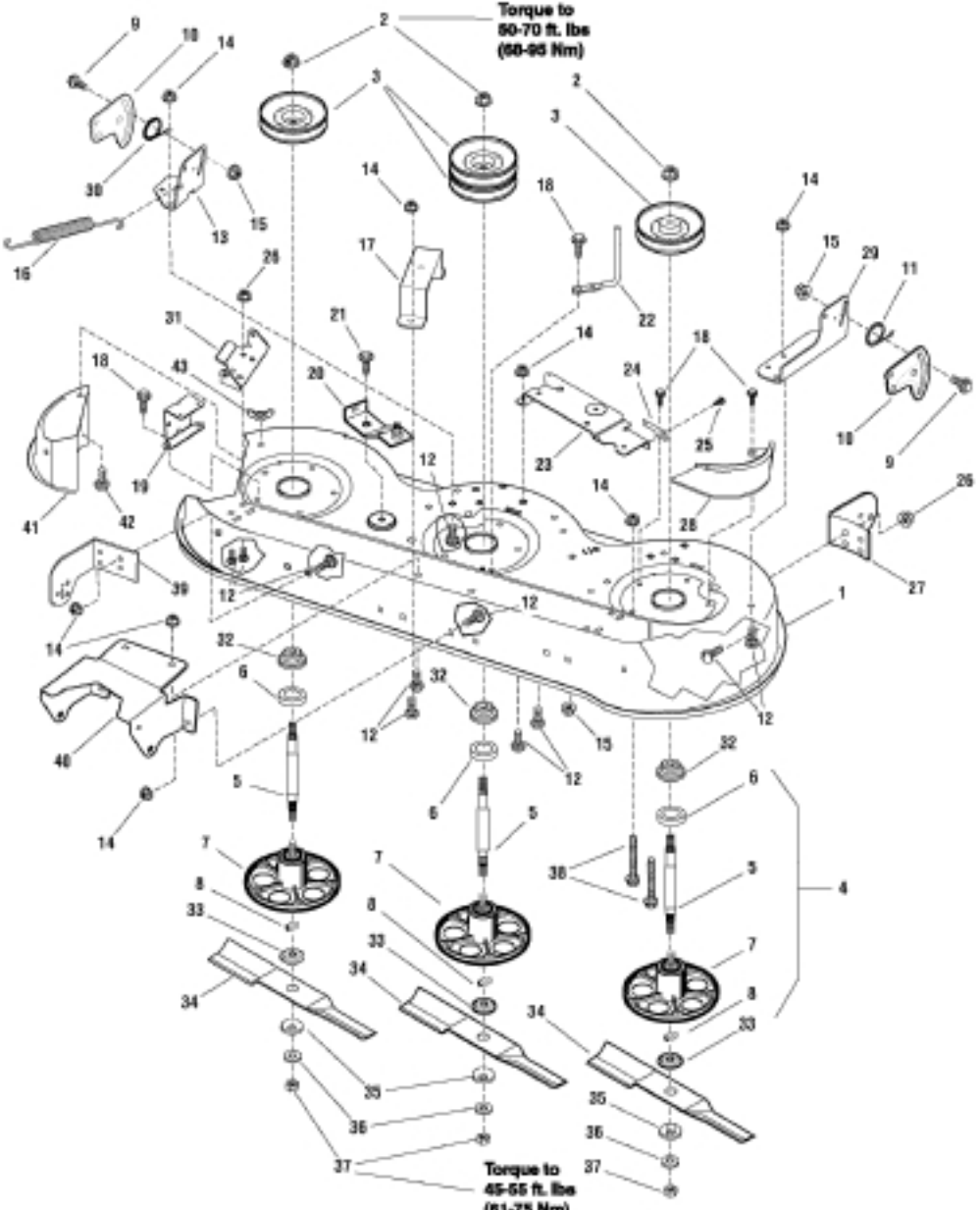
Torque to
50-70 ft. lbs
(68-95 Nm)
Torque to
45-55 ft. lbs
(61-75 Nm)

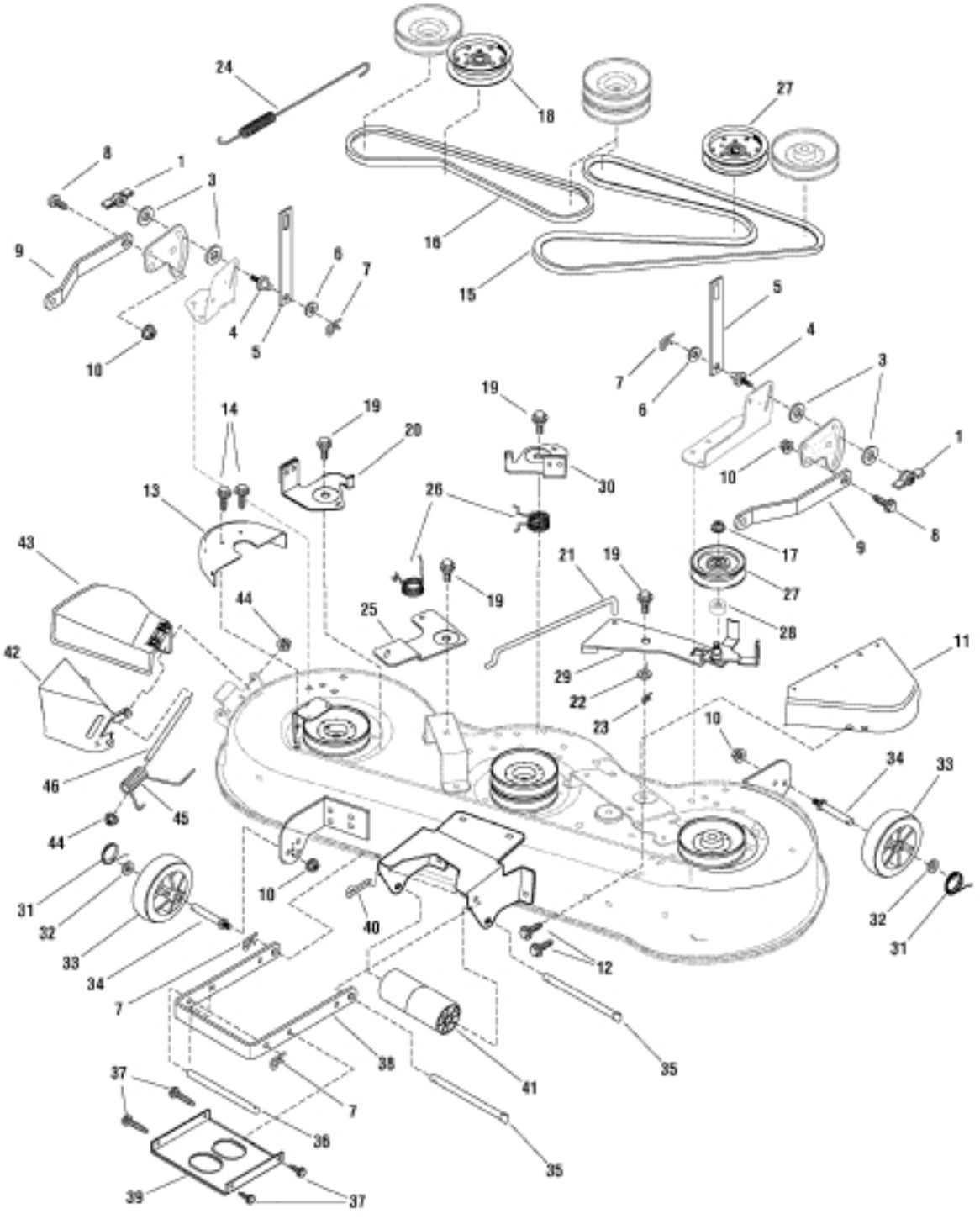
24
18
27
8
1
3
9
16
6
7
15
4
5
10
5
4
7
6
3
19
14
19
20
30
1
10
13
26
17
9
8
43
21
19
27
19
44
25
28
11
42
29
22
23
10
46
34
33
45
44
31
10
40
32
32
33
12
31
34
7
38
41
35
37
7
36
35
39
37

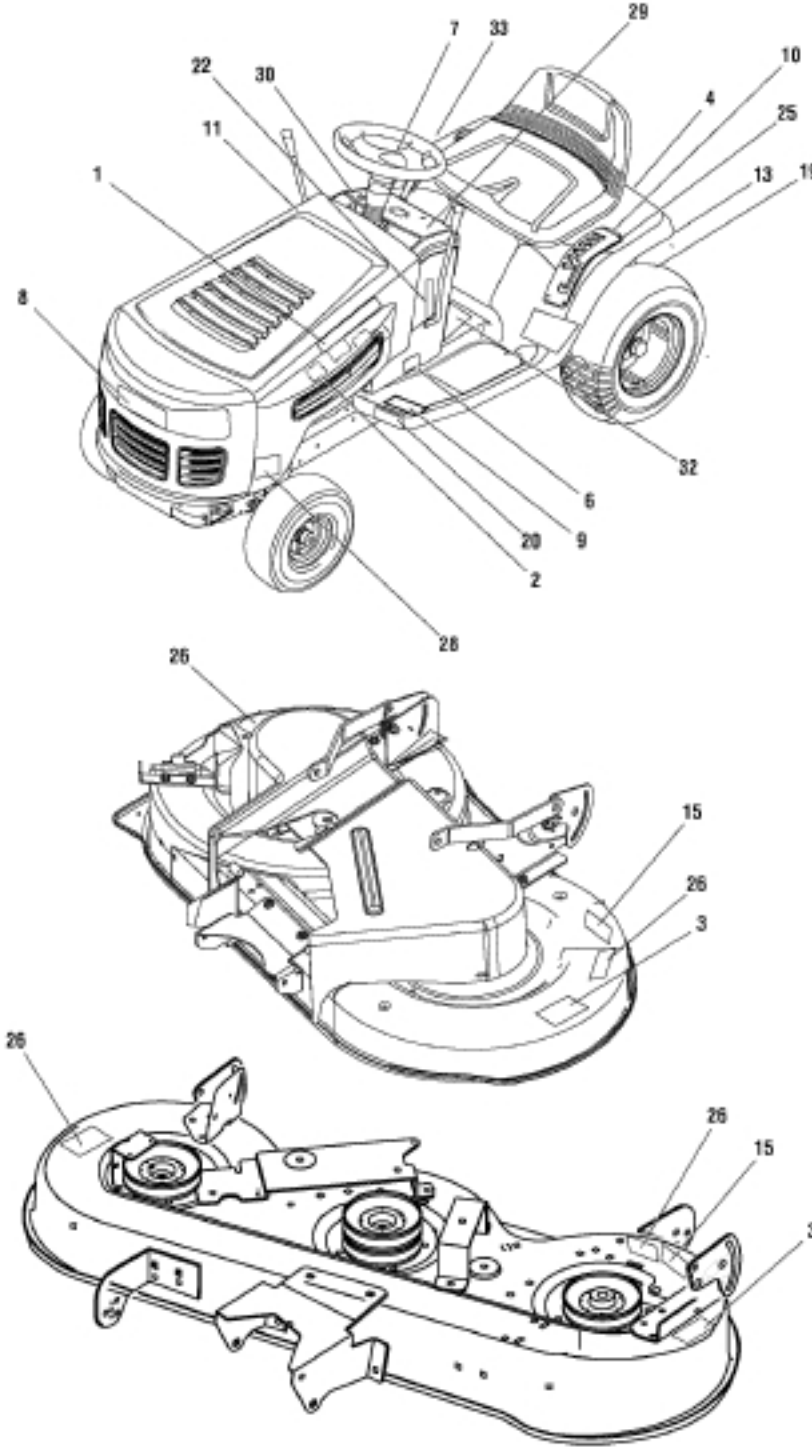
29
7
33
10
22
30
4
25
11
13
19
1
8
32
6
20
9
2
28
26
15
26
3
26
26
15
3

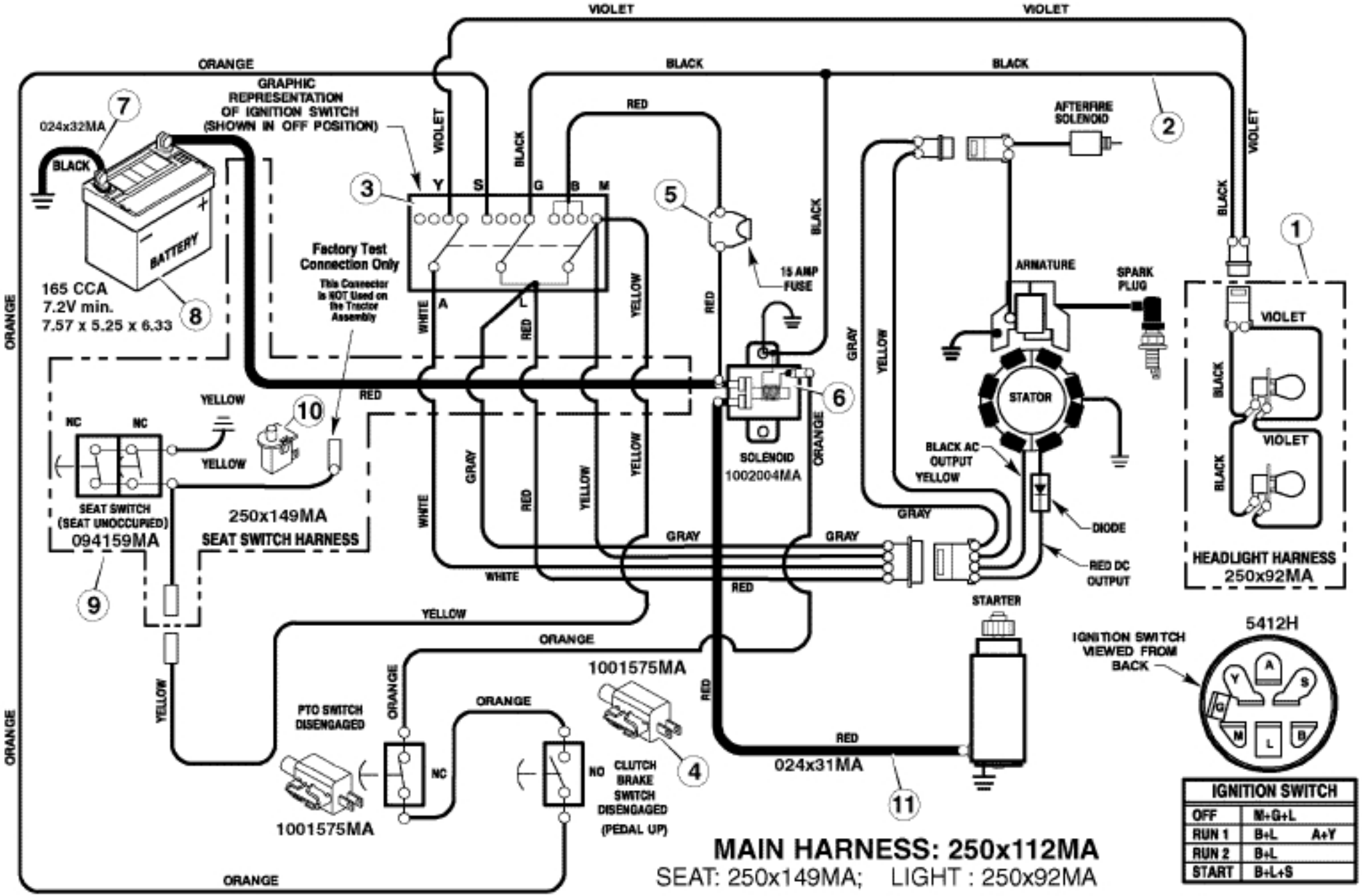

IGNITION SWITCH	
OFF	M+G+L
RUN 1	B+L A+Y
RUN 2	B+L
START	B+L+S

MAIN HARNESS: 250x112MA

SEAT: 250x149MA; LIGHT : 250x92MA

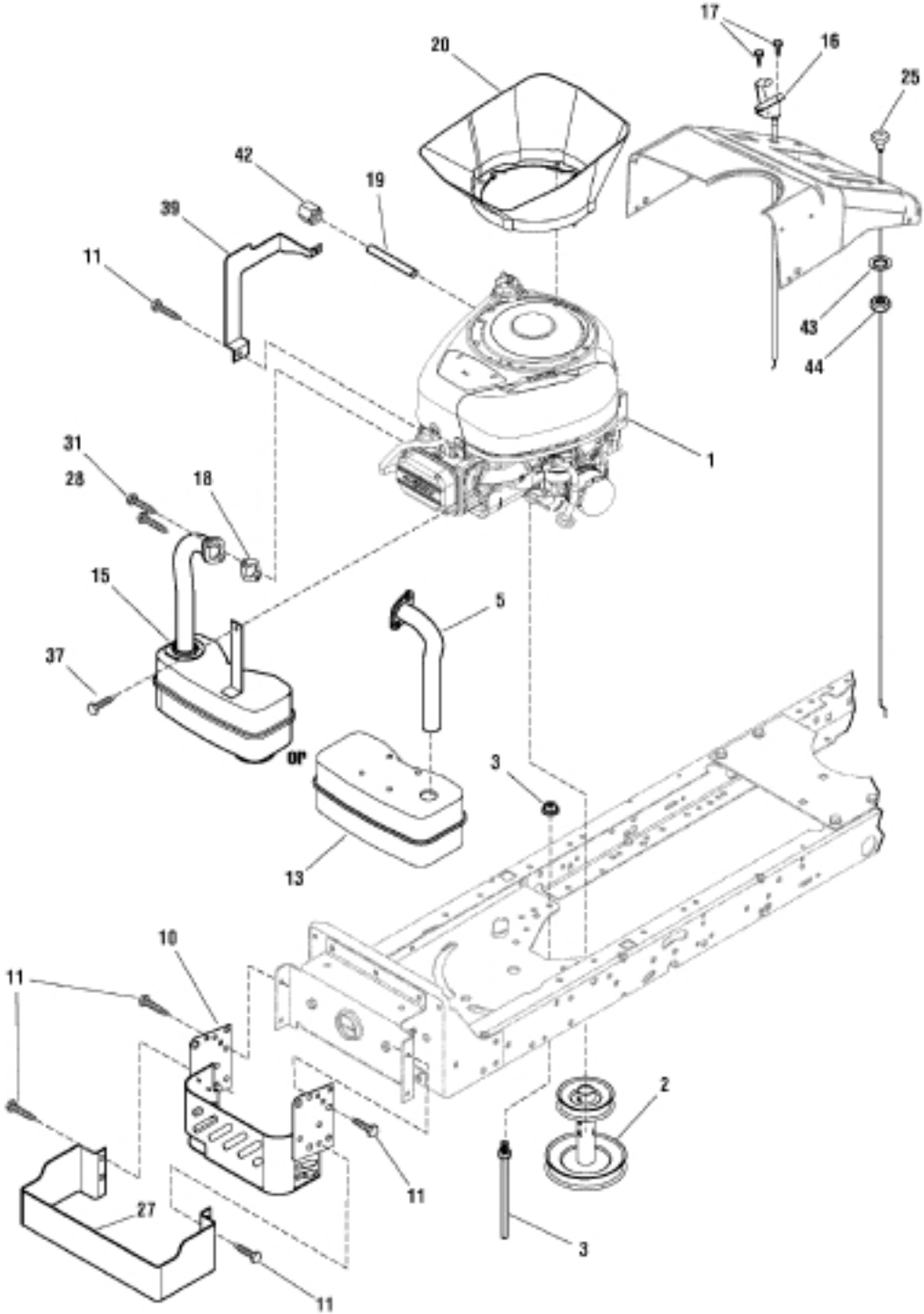
17
16
20
25
42
19
39
11
43
44
1
31
28
18
15
5
37
OR
3
13
10
11
2
3
27
11
11

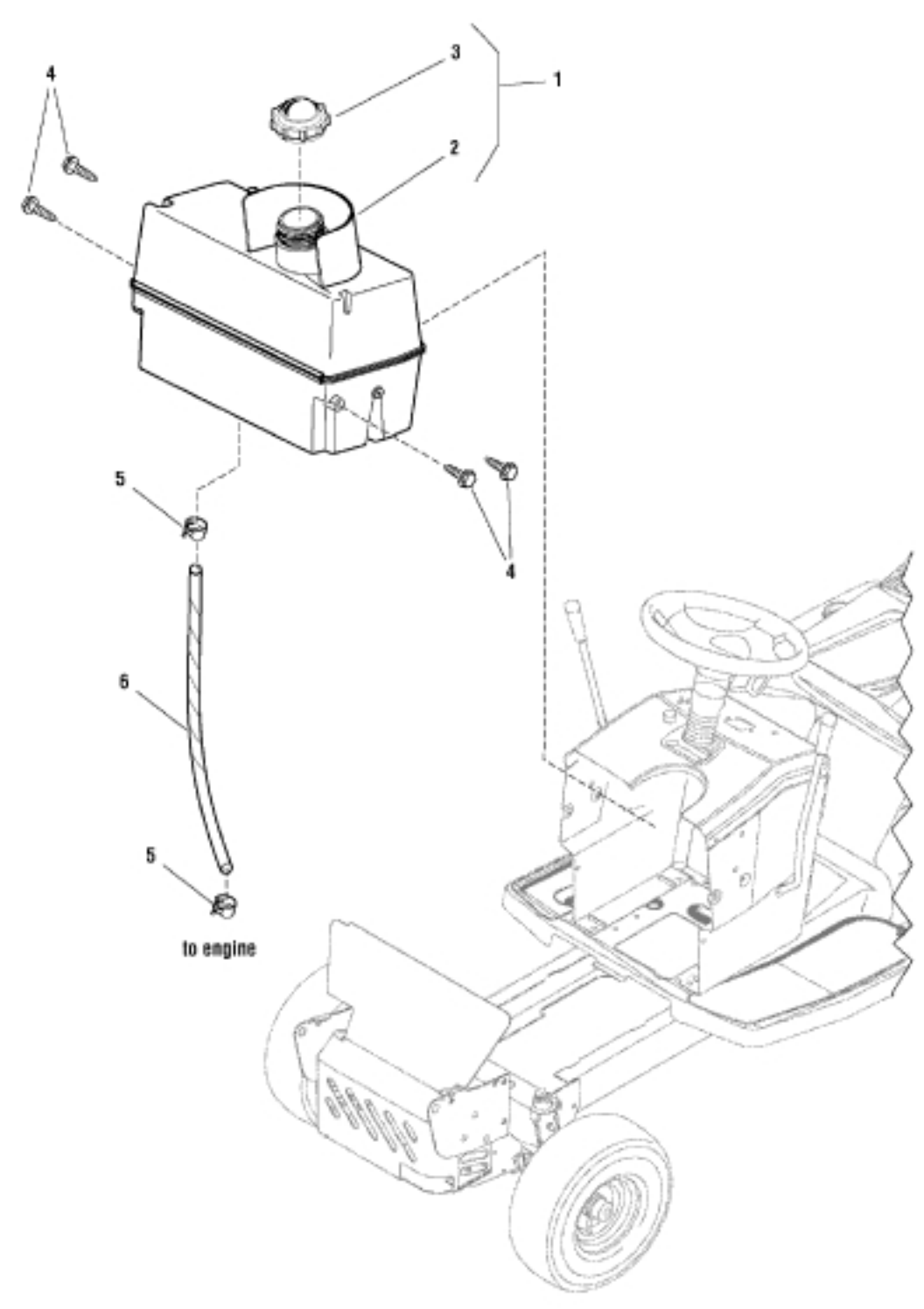
4
3
1
2
4
5
4
6
5
to engine

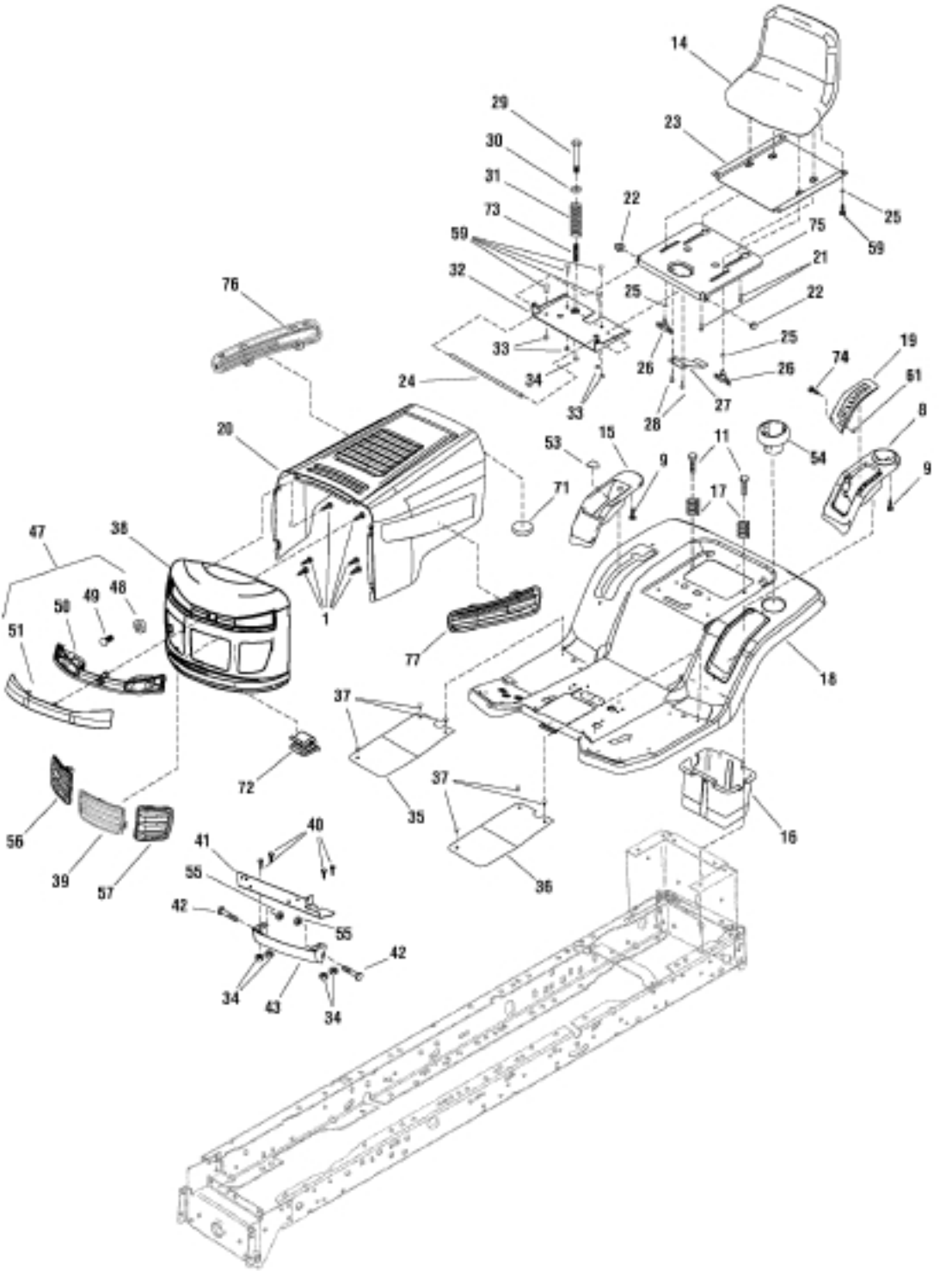
14
29
23
30
31
22
25
73
75
59
59
21
32
22
76
25
25
33
26
26
19
74
61
24
34
27
33
28
8
20
15
11
53
54
9
9
71
17
47
38
48
49
50
1
51
77
18
37
72
37
35
16
56
40
41
39
57
55
36
42
55
42
34
43
34

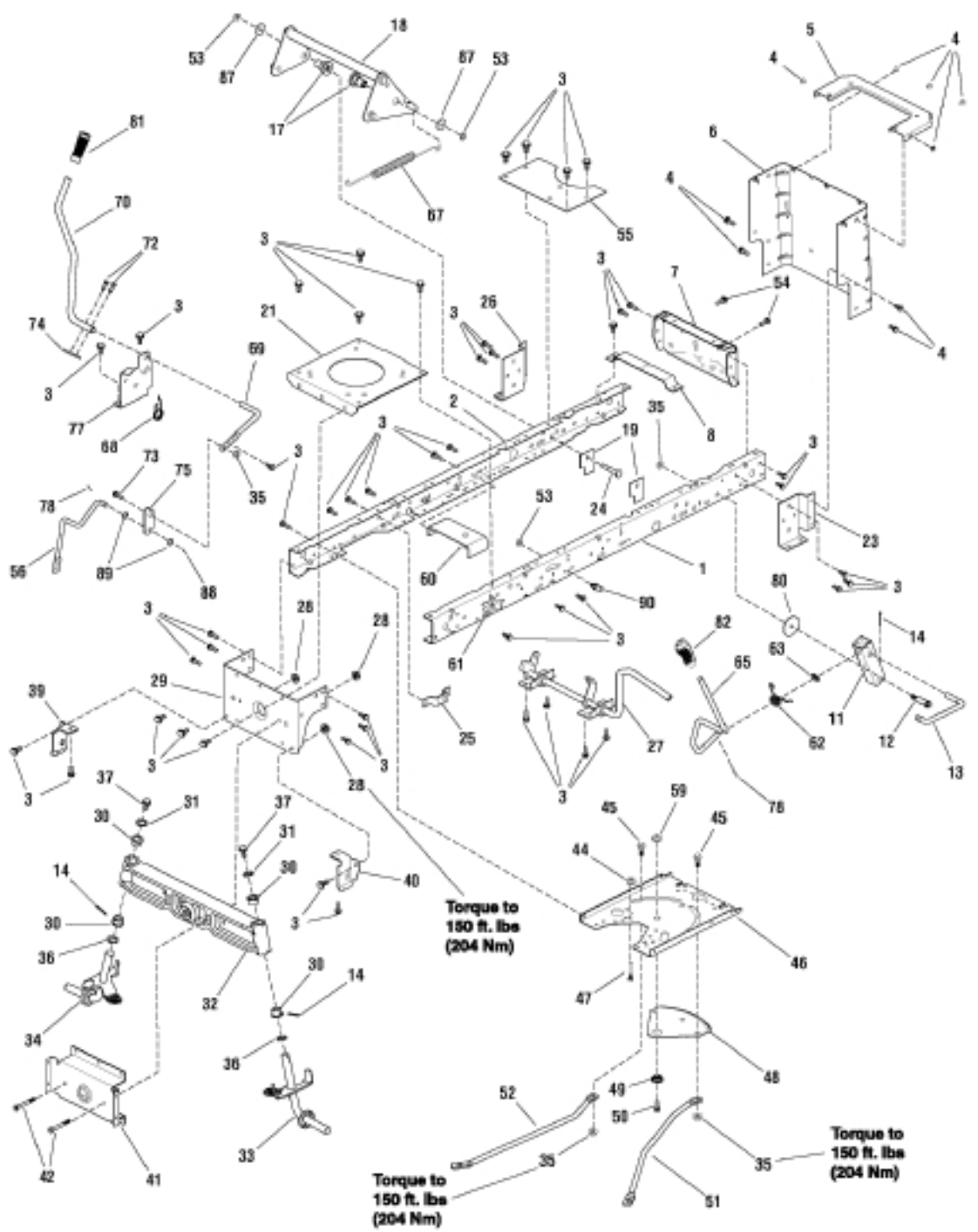
Torque to 150 ft. lbs (204 Nm)
Torque to 150 ft. lbs (204 Nm)
Torque to 150 ft. lbs (204 Nm)

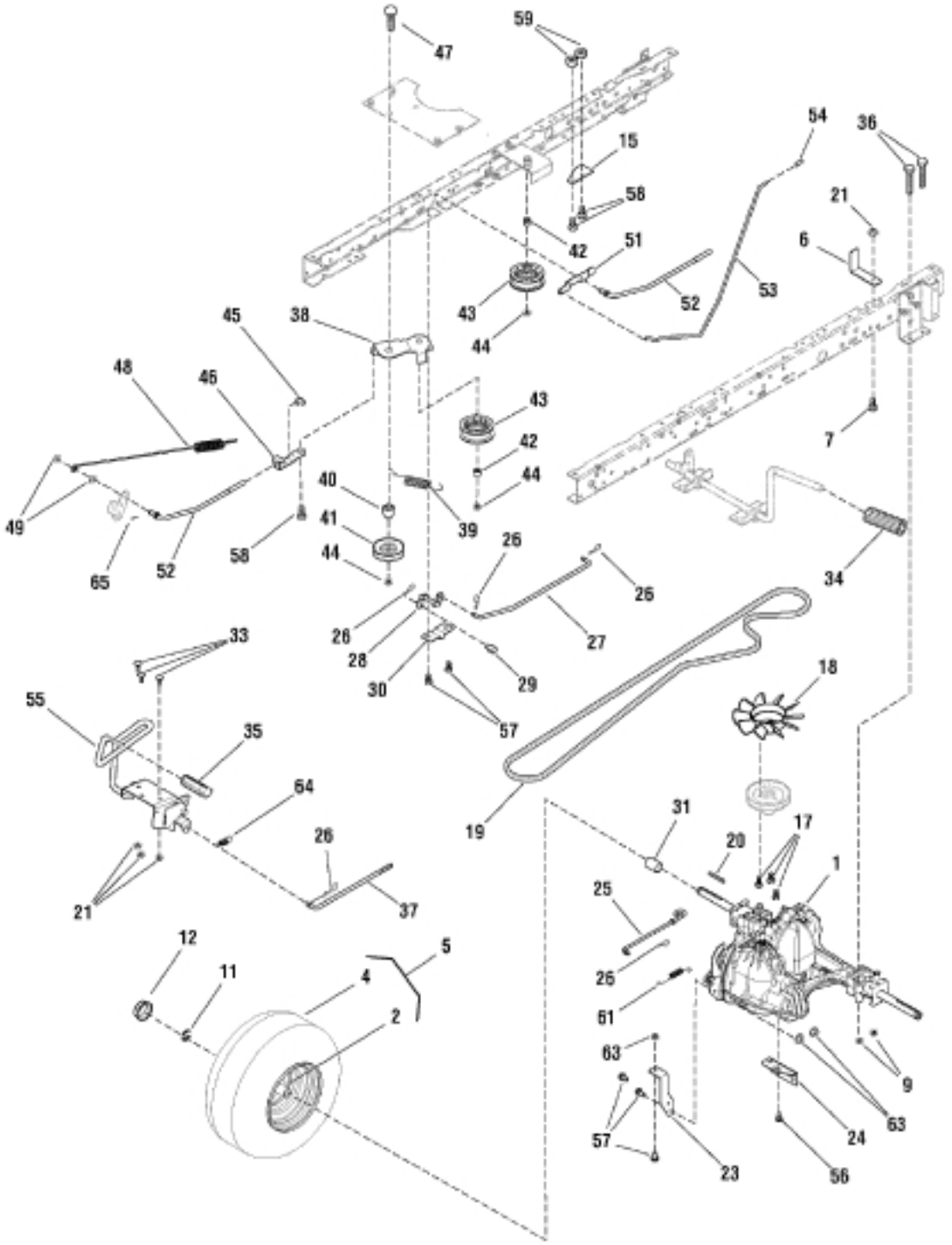
47
59
15
58
42
51
52
53
54
36
21
6
43
44
38
45
48
46
49
65
52
58
40
41
44
39
43
42
44
7
34
26
26
26
28
30
27
29
57
33
55
35
64
26
37
21
19
18
31
20
17
1
25
26
61
63
9
63
24
56
57
23
12
11
4
5
2

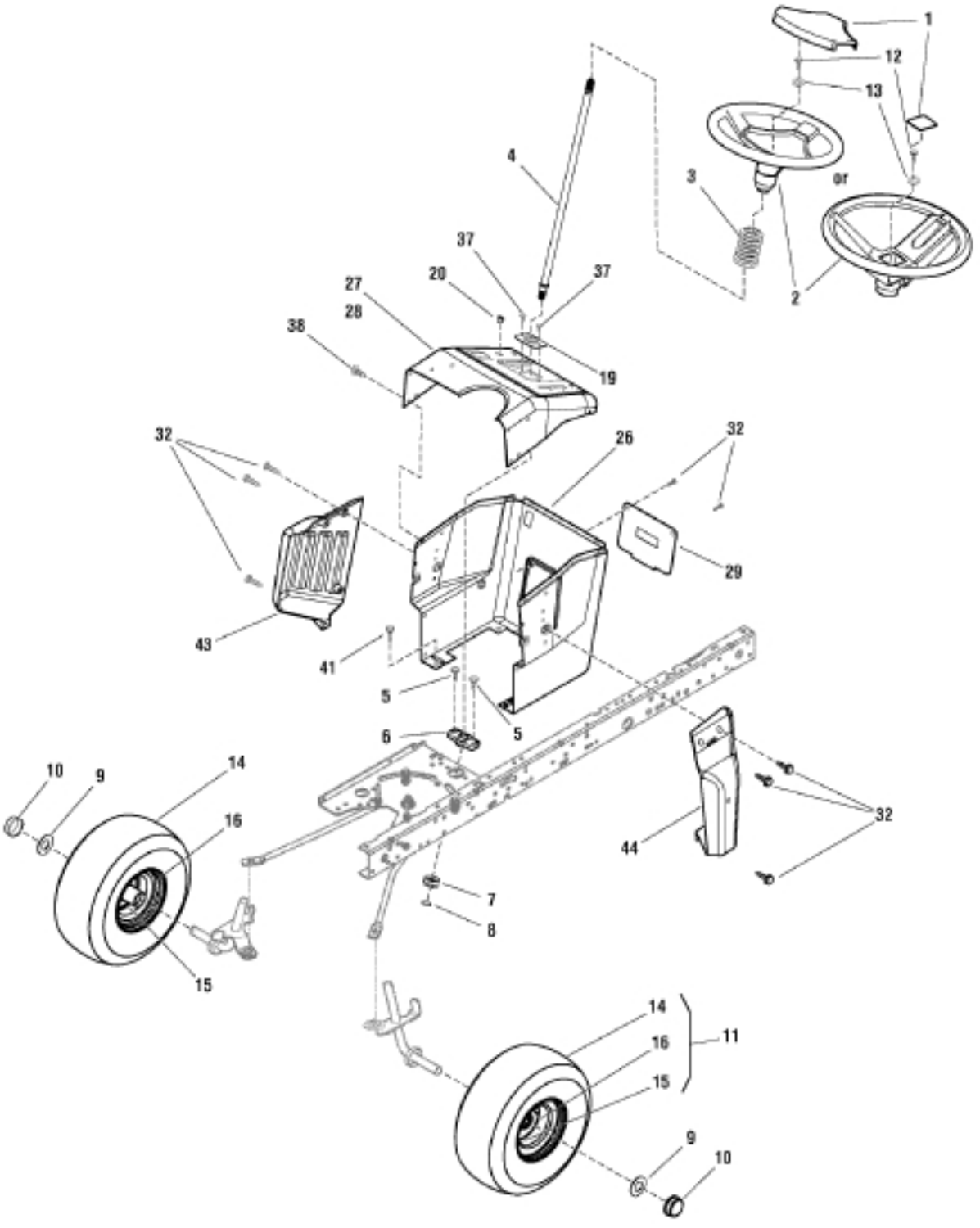
1
12
13
4
3
or
2
37
20
37
27
28
38
19
32
26
32
29
43
41
5
5
6
10
9
14
16
15
7
8
44
32
14
16
15
11
9
10

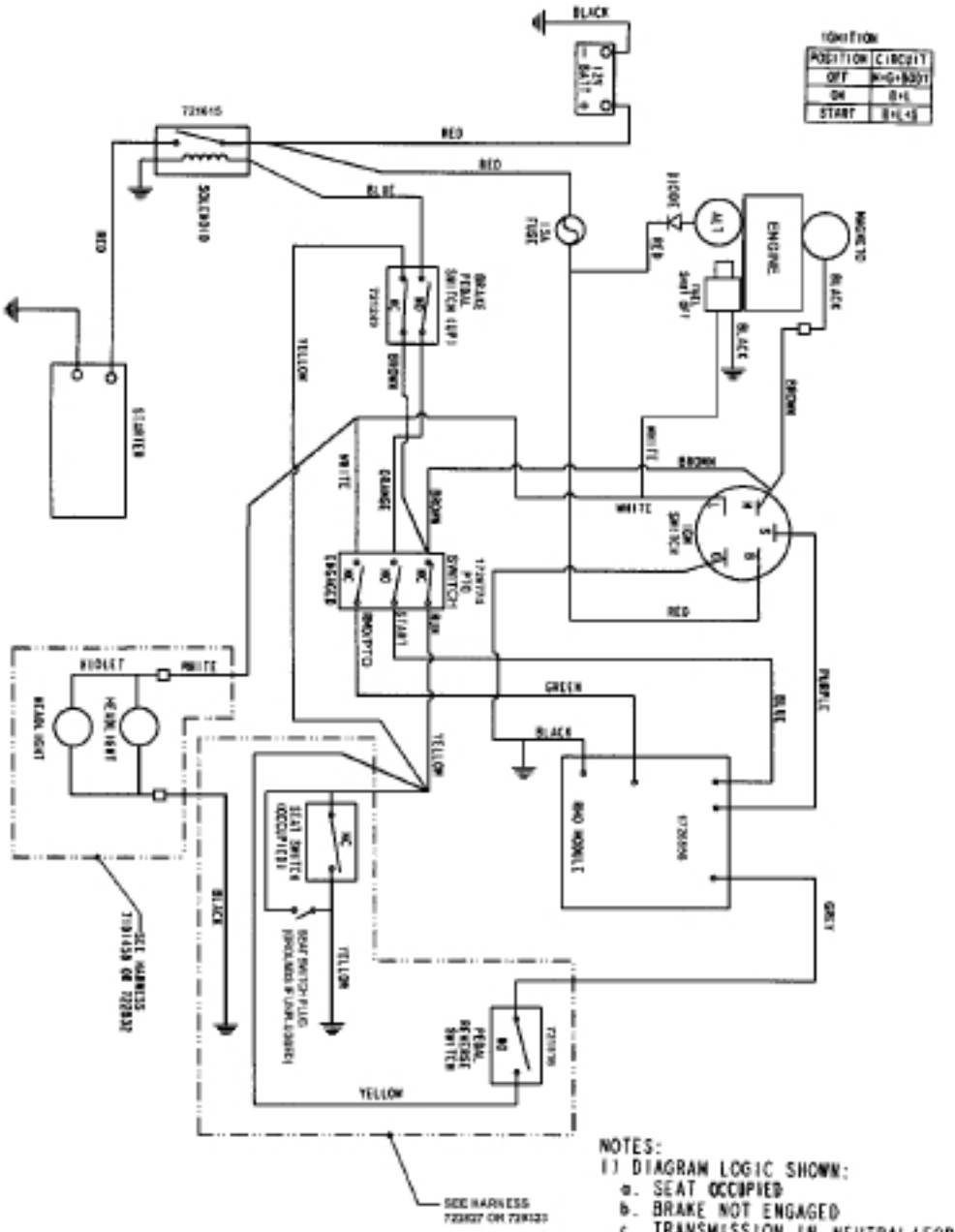

Wiring Schematic for 15.5, 18.5 & 20 HP Briggs Engines