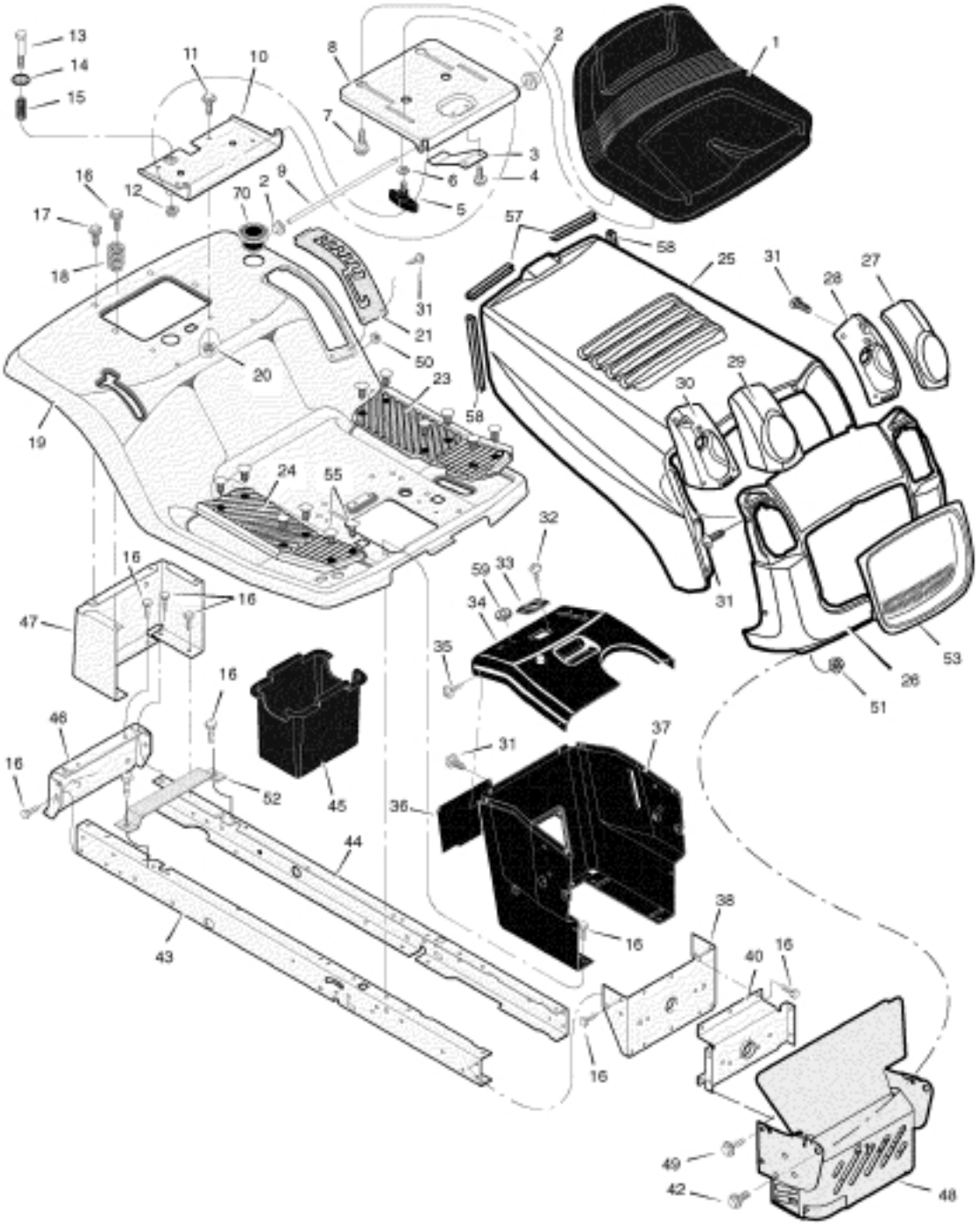
1
2
3
4
5
6
7
8
9
10
11
12
13
14
15
16
17
18
19
20
21
23
24
25
26
27
28
29
30
31
32
33
34
35
36
37
38
40
42
43
44
45
46
47
48
49
50
51
52
53
55
57
58
59
70

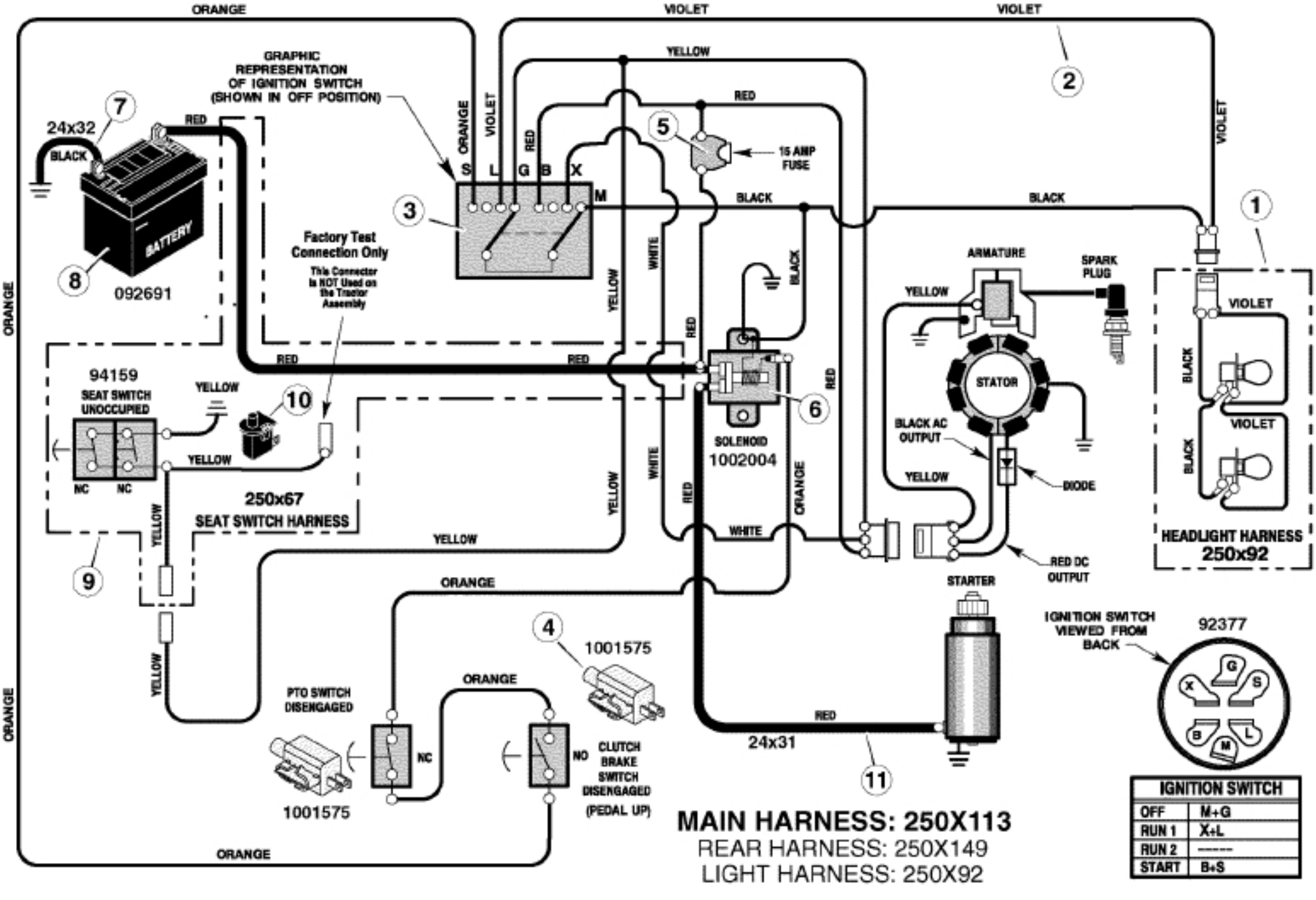

IGNITION SWITCH	
OFF	M+G
RUN 1	X+L
RUN 2	-----
START	B+S

MAIN HARNESS: 250X113

REAR HARNESS: 250X149

LIGHT HARNESS: 250X92

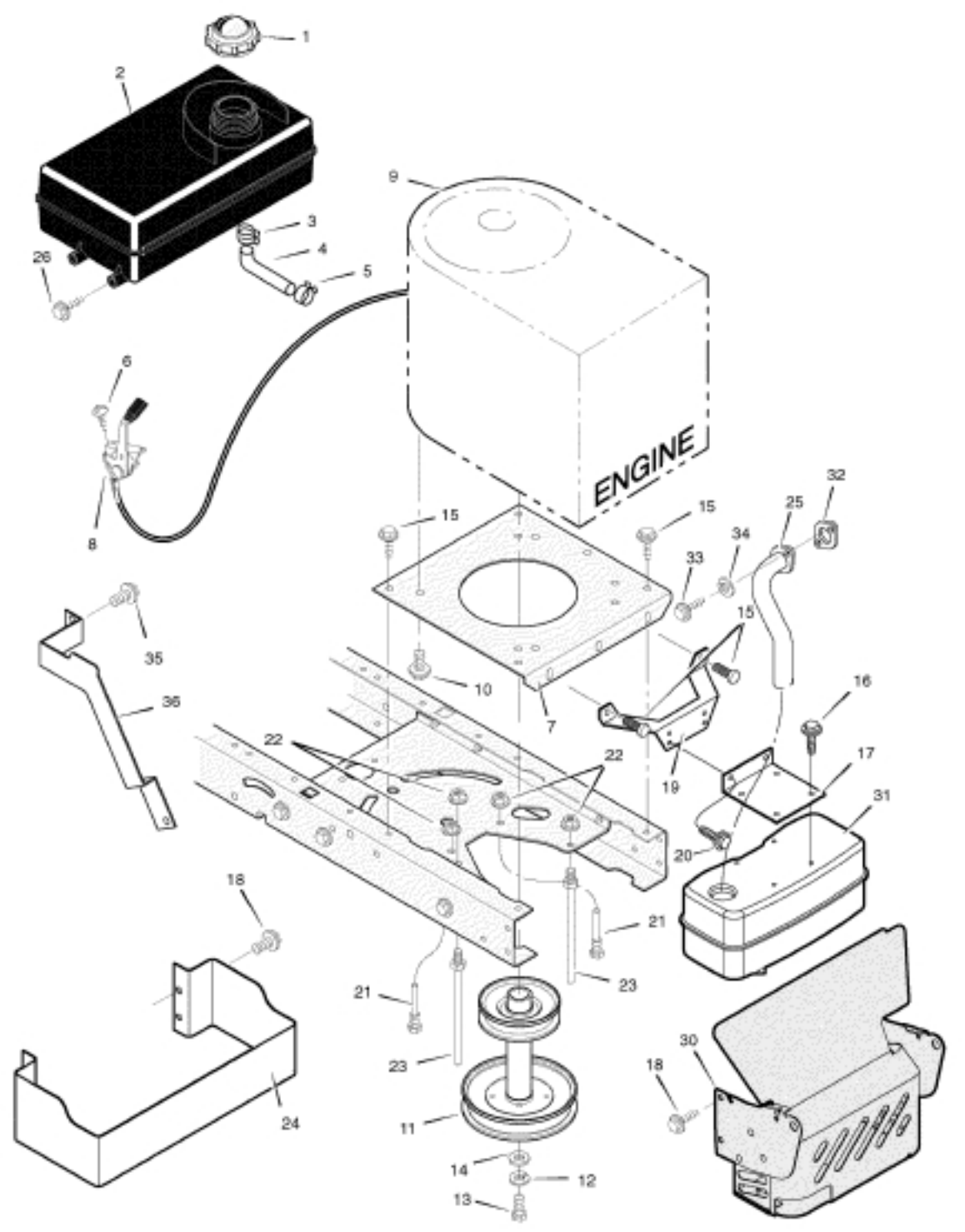
ENGINE

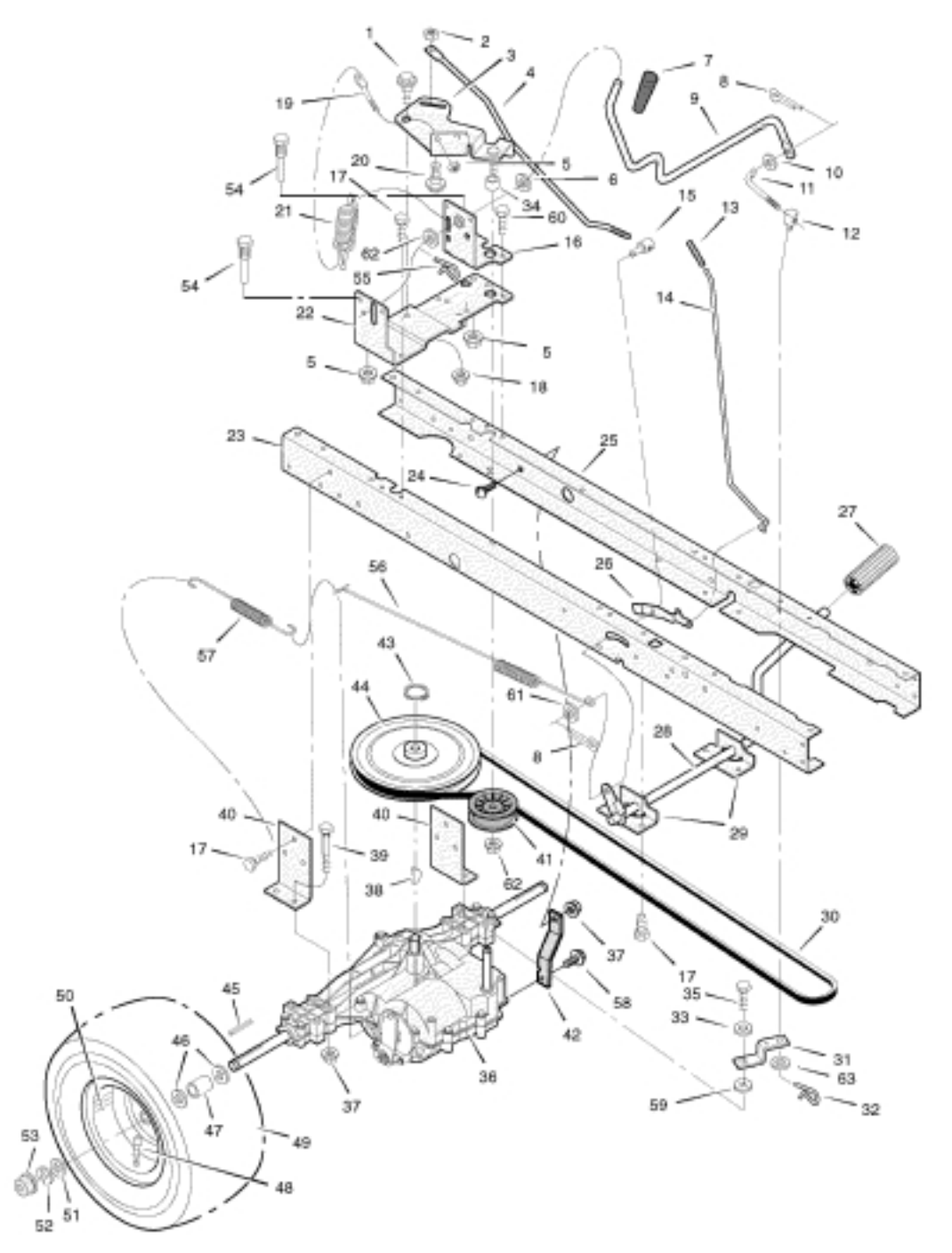
1
2
3
4
7
8
9
19
20
5
6
10
11
54
17
34
60
15
13
12
21
62
16
54
55
14
22
5
5
18
23
25
24
27
56
26
57
43
44
61
28
8
29
40
40
41
17
39
38
62
30
37
17
45
58
35
50
33
42
46
31
63
36
37
59
32
47
49
53
48
52
51

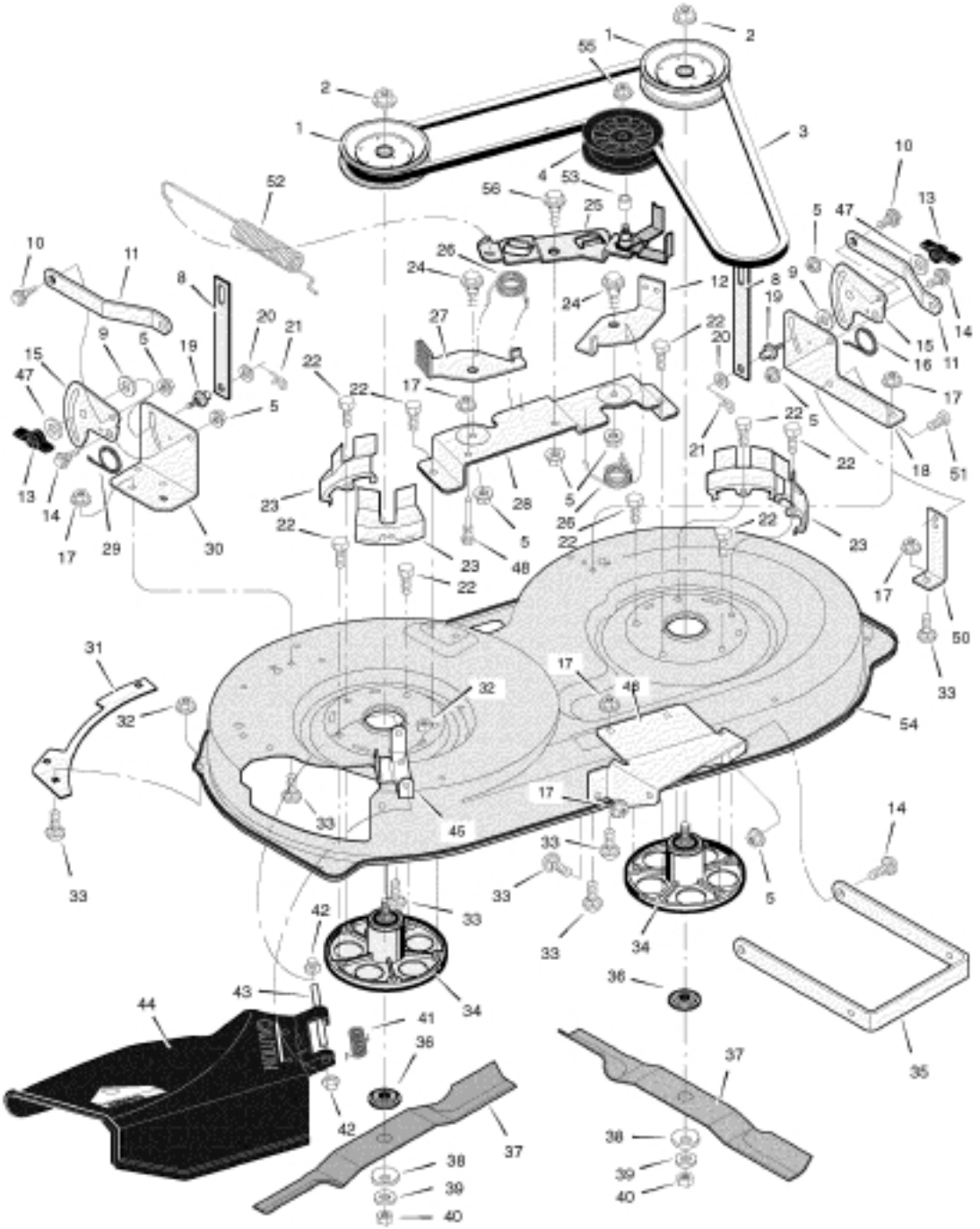

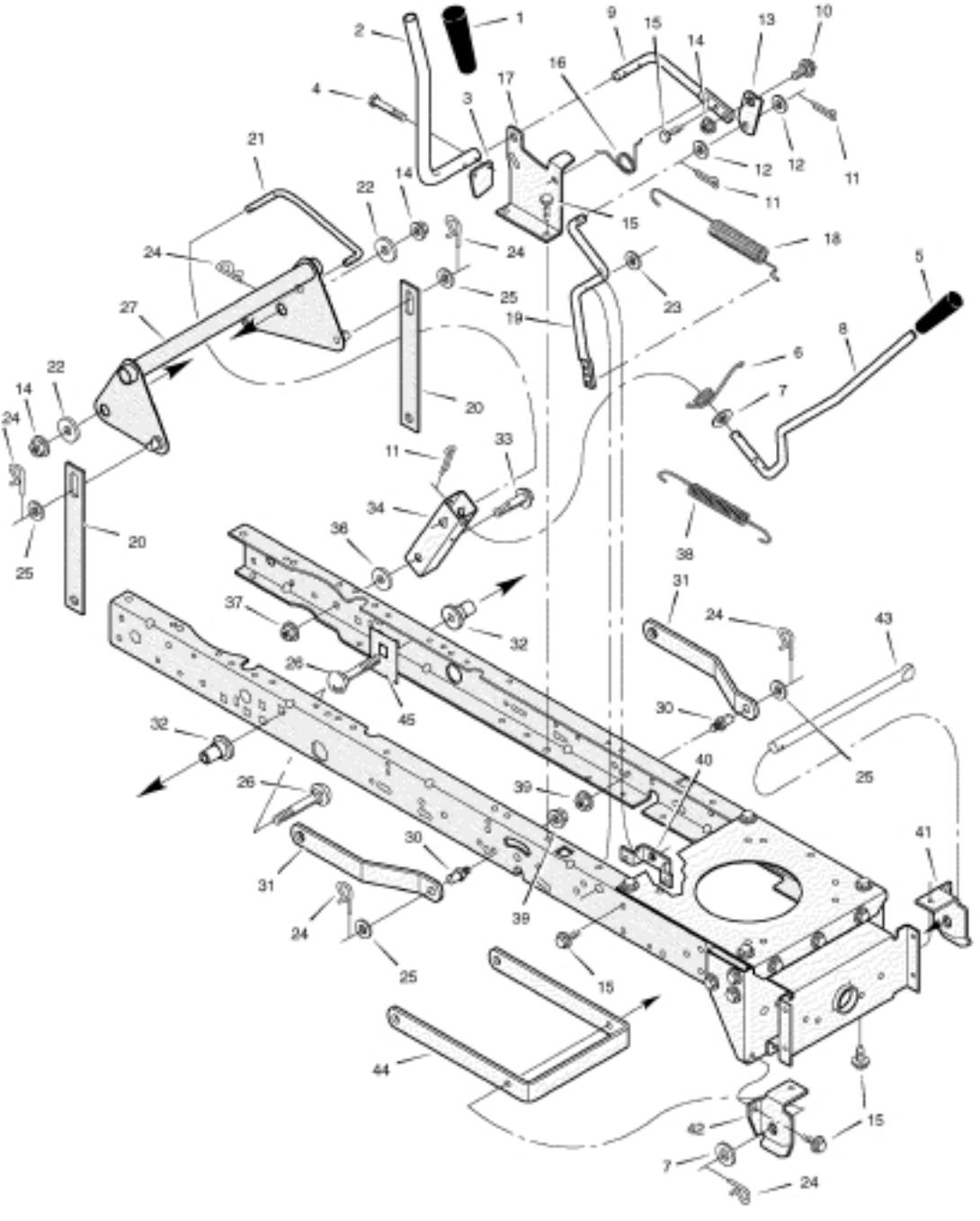
1
2
3
4
5
6
7
8
9
10
11
12
13
14
15
16
17
18
19
20
21
22
23
24
25
26
27
30
31
32
33
34
36
37
38
39
40
41
42
43
44
45

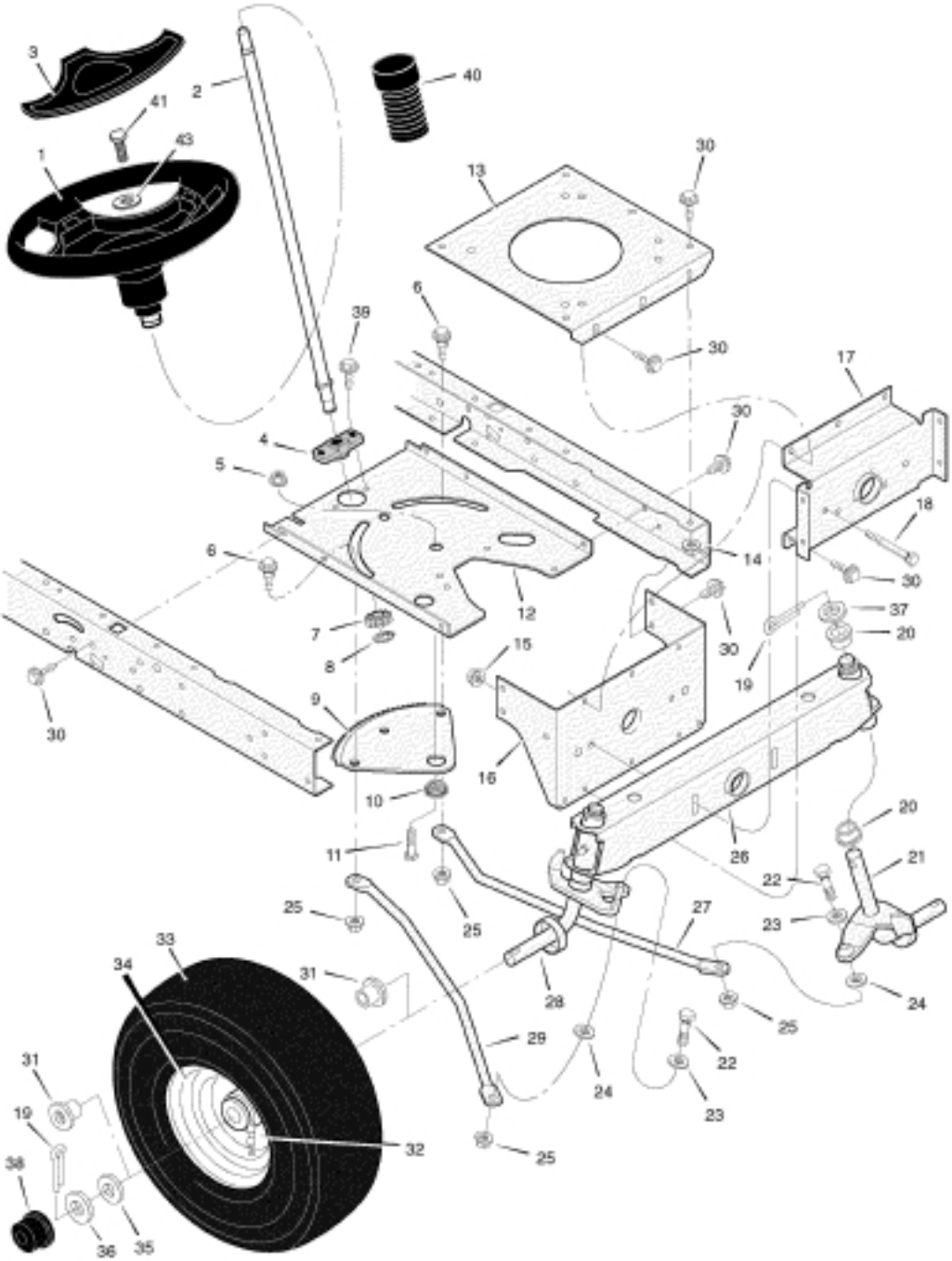
1
2
3
4
5
6
7
8
9
10
11
12
13
14
15
16
17
18
19
20
21
22
23
24
25
26
27
28
29
30
31
32
33
34
35
36
37
38
39
40
41
43