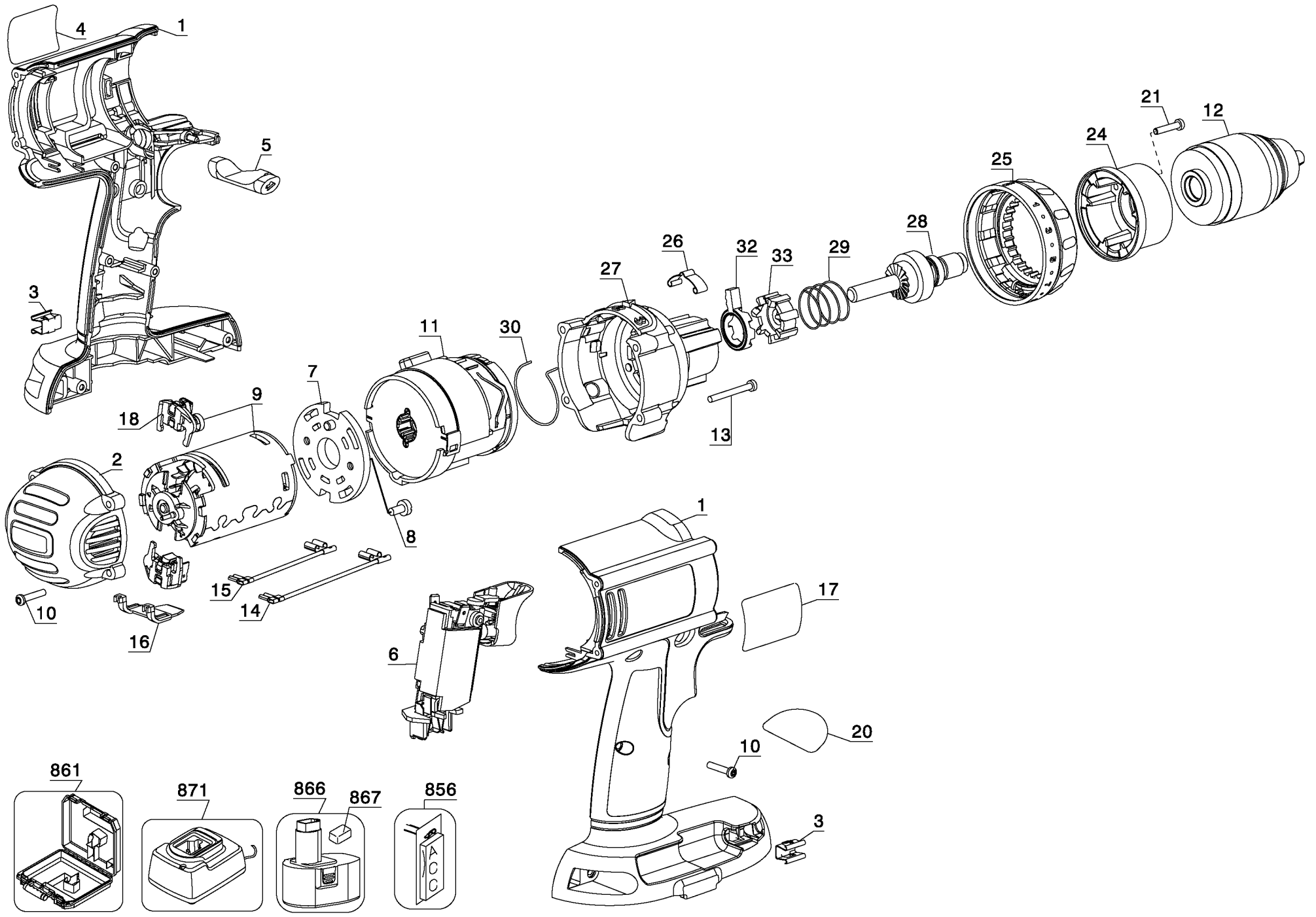
4
1
5
3
21
12
24
25
28
26
32
33
29
27
11
30
7
9
18
13
2
8
15
14
10
16
1
17
6
20
10
3
861
871
866
867
856
ACC

Parts List for DC935VA Type 1

Item Number	Part Number	Description	Qty Required
1	629820-01	CLAMSHELL SET	1
2	629823-00	END CAP	1
3	148354-03	BIT CLIP	2
4	395657-00	ID LABEL	1
5	633327-02	FWD/REV BUTTON	1
6	152274-24	VSR SWITCH	1
7	629172-00	ADAPTER PLATE	1
8	156179-01	SCREW,TAPTITE	2
9	629151-01	MOTOR & PINION	1
10	682211-00	SCREW,TORX	5
11	646856-00	TRANSMISSION	1
12	330075-75	CHUCK	1
13	330019-62	SCREW,THD.FORM	8
14	631282-01	LEADWIRE ASSY.	1
15	631283-01	LEADWIRE ASSY.	1
16	636634-00	MOTOR LEAD WIRE GUIDE	1
17	638111-00	NAMEPLATE	1
18	603754-01	BRUSH BOX	2
20	640421-00	INSTRUCTION LABEL	1
21	330019-00	SCREW	3
24	609133-00	CAP	1
25	629463-00	ADJ.COLLAR	1
26	395460-00	DETENT SPRING	1
27	629829-00	SPINDLE HOUSING ASSY	1
28	638692-00	SPINDLE ASSY.	1
29	394546-00	SPRING	1
30	399059-00	CAM RETURN SPRING	1

COPYRIGHT© 2005. All Rights Reserved.
Parts list, pricing, and availability subject to change. Please visit www.dewaltservicenet.com for current parts information.

Parts List for DC935VA Type 1

Item Number	Part Number	Description	Qty Required
32	394545-00	CAM RING	1
33	394542-00	RATCHET,FIXED	1
35	629828-00	CHUCK & SPINDLE ASSY	1
36	646594-00	SIDE HANDLE	1
836	233804-40	CHUCK REMOVAL FIXTURE	1
836	233804-41	MANDREL	1
836	233804-42	INSERT	1
856	607918-41	SCREWDRIVER BIT	1
861	640040-00	KITBOX	1
867	608522-00	BATTERY CAP	2

COPYRIGHT© 2005. All Rights Reserved.
Parts list, pricing, and availability subject to change. Please visit www.dewaltservicenet.com for current parts information.