F012SD7707

Stand Issue } 07-04-20 **Fig./Abb. 1**

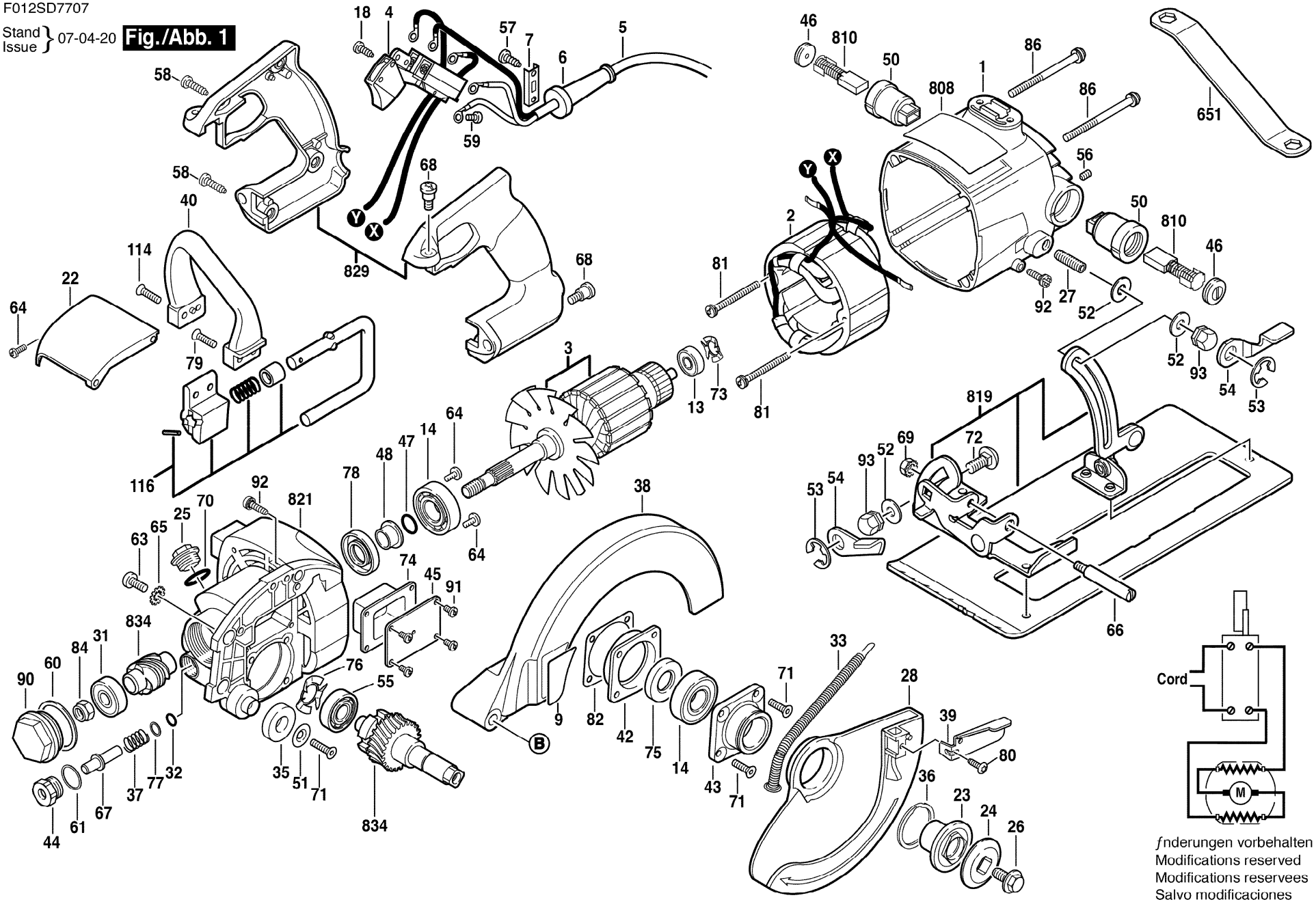

ƒnderungen vorbehalten
Modifications reserved
Modifications reservees
Salvo modificaciones