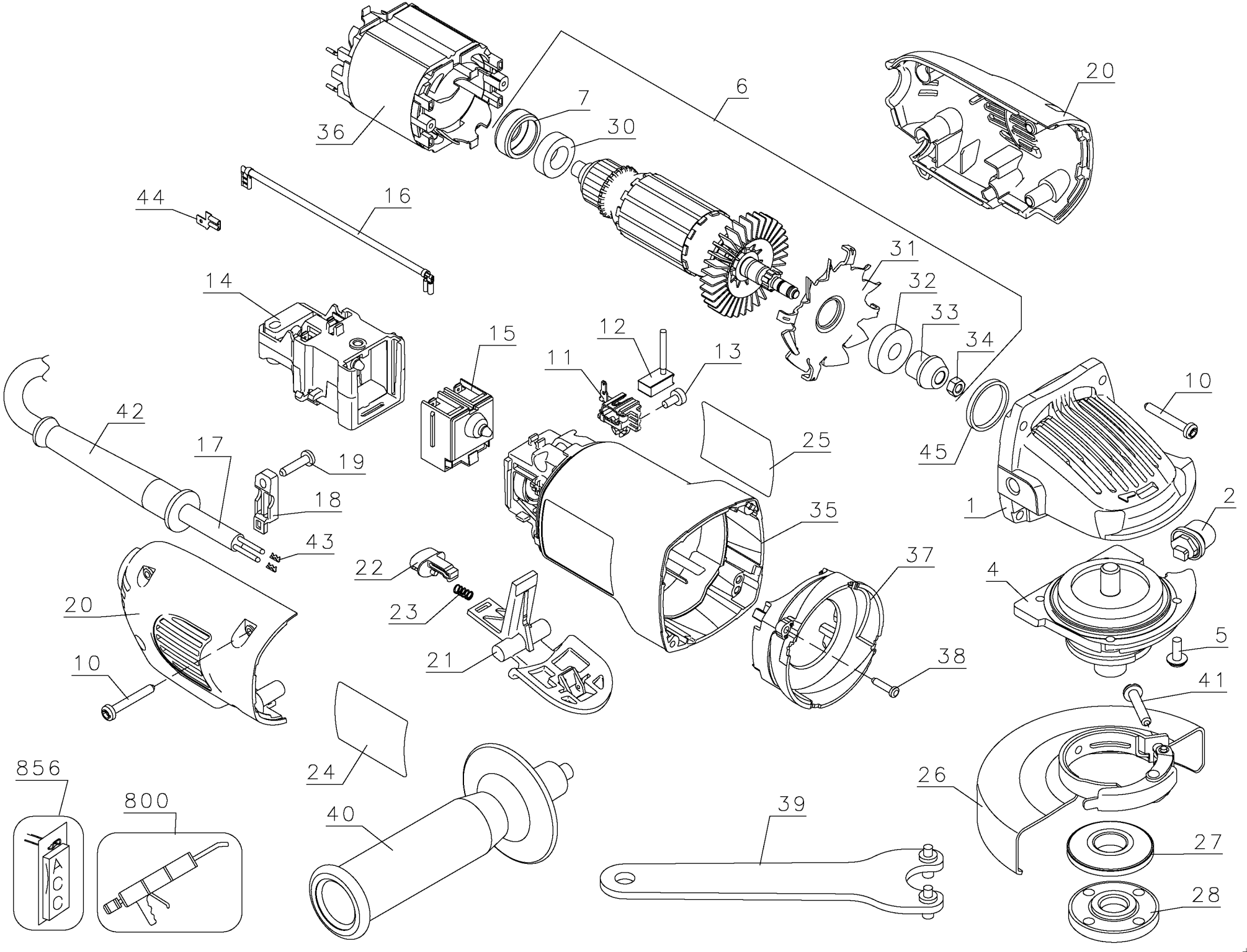

6
7
30
36
20
44
16
31
32
33
34
14
15
12
11
13
10
42
17
19
18
25
45
1
2
35
43
22
37
4
20
23
5
21
38
10
41
24
856
800
40
39
26
27
28
ACC

Parts List for DW802 Type 1

Item Number	Part Number	Description	Qty Required
1	397596-00	GEAR CASE ASSY.	1
2	397609-00	SPINDLE LOCK ASSY.	1
4	397599-00	GEAR CASE COVER ASSY.	1
5	146929-00	SCREW,TRI-ROUND	4
6	397620-00	ARMATURE ASSY.	1
7	389824-00	CUP	1
10	330065-13	SCREW	8
11	397636-00	BRUSH BOX ASSY	2
12	397642-00	BRUSH,SHUNTED	2
13	330019-10	SCREW	2
14	619800-00	SWITCH SUPPORT	1
15	945614-00	SWITCH,ON/OFF	1
16	397629-00	LEAD ASSY.	1
17	330072-98	CORD/8FT/18-2SJ	1
18	397658-00	CORD CLAMP	1
19	330065-08	SCREW	1
20	397626-00	END CAP ASSY	1
21	397655-00	PADDLE ASSY.	1
22	397659-00	LOCK BUTTON	1
23	397611-00	SPRING,COMP.	1
24	616646-00	NAMEPLATE	1
25	395047-00	ID LABEL	1
26	397661-01	GUARD	1
27	397616-00	FLANGE	1
28	611672-00	OUTER FLANGE	1
30	330003-60	BEARING	1
31	397623-00	PLATE, BEARING	1

COPYRIGHT© 2005. All Rights Reserved.
Parts list, pricing, and availability subject to change. Please visit www.dewaltservicenet.com for current parts information.

Parts List for DW802 Type 1

Item Number	Part Number	Description	Qty Required
32	330003-81	BEARING	1
33	611829-00	PINION	1
34	330015-04	NUT,HEX	1
35	397634-00	FIELD CASE	1
36	397627-00	FIELD ASSY.	1
37	397644-00	BAFFLE	1
38	390198-00	SCREW	2
39	401680-00	WRENCH	1
40	149142-00	HANDLE,SIDE	1
41	616623-00	SCREW	1
42	330005-01	PROTECTOR,CORD	1
43	444262-00	TERMINAL	2
44	617259-00	TERMINAL	2
45	397673-00	RUBBER SLEEVE	1
800	286436-00	GREASE	1

COPYRIGHT© 2005. All Rights Reserved.
Parts list, pricing, and availability subject to change. Please visit www.dewaltservicenet.com for current parts information.