0 601 64F 039

Issue / Stand } 04-05-13
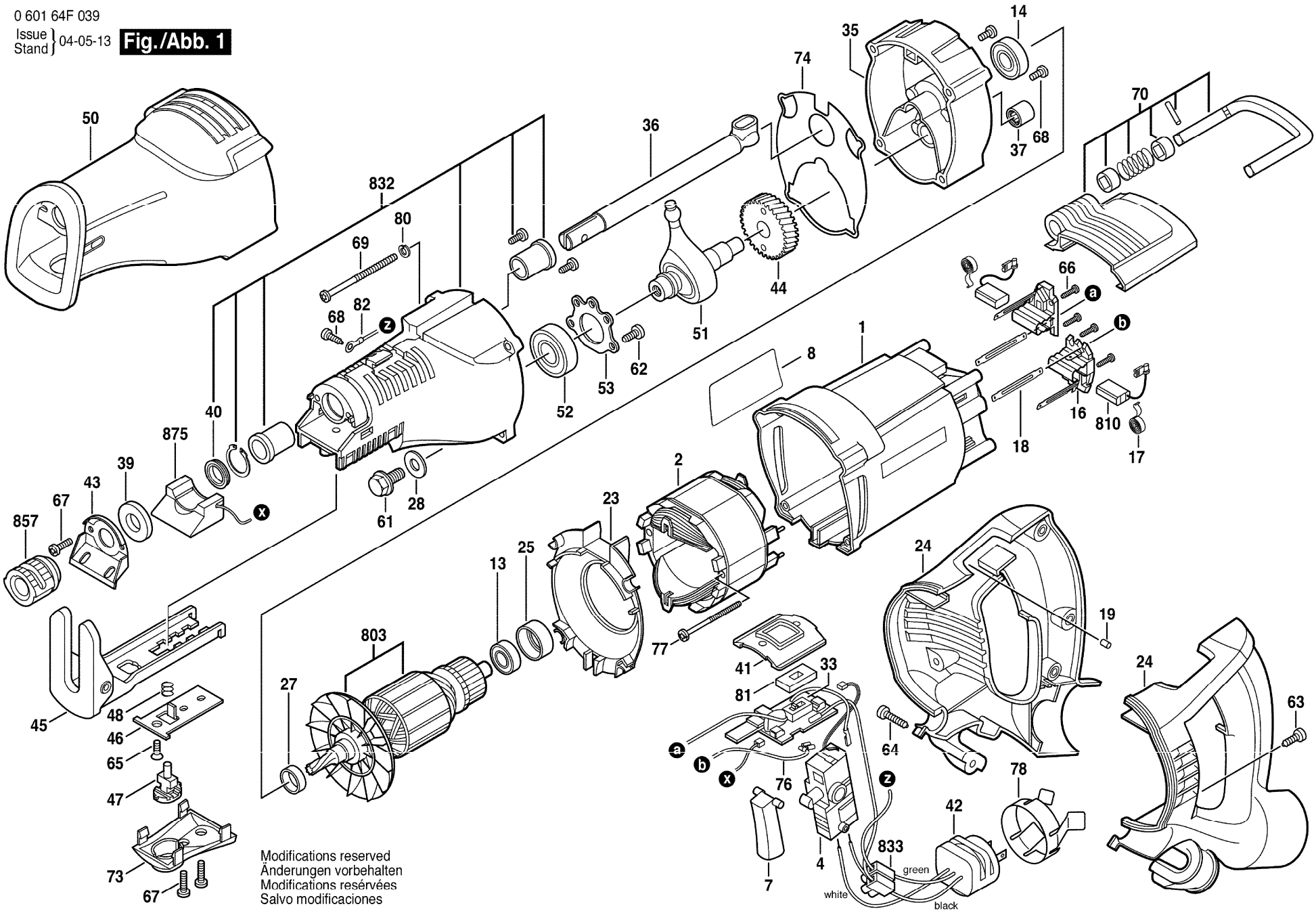
Fig./Abb. 1