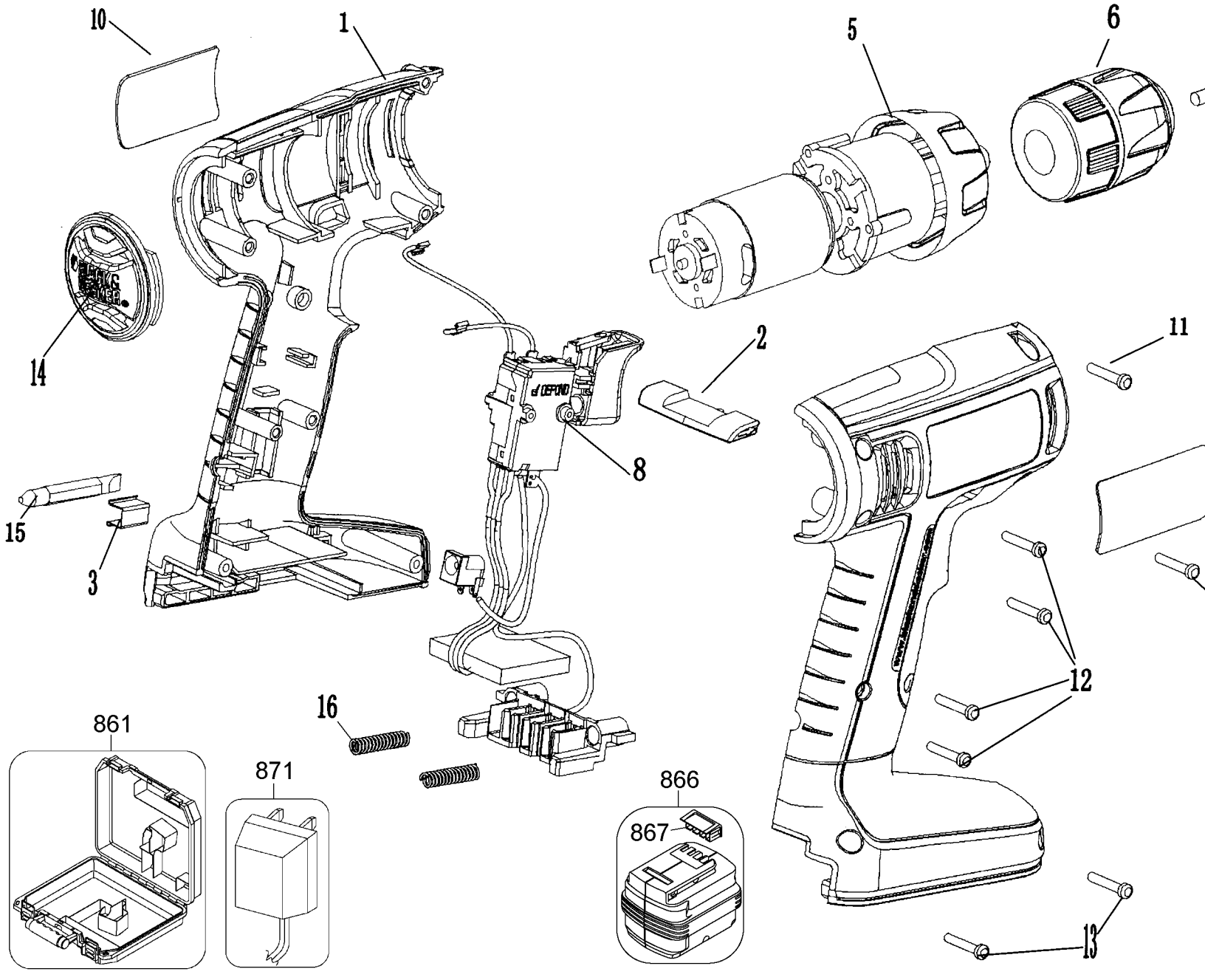
10
1
5
6
14
2
11
8
15
3
12
16
861
871
866
867
13

Parts List for CDC1800 Type 1

Item Number	Part Number	Description	Qty Required
1	90503056-08	CLAMSHELL SET	1
2	90503047	F/R ACTUATOR	1
3	148354-03	BIT CLIP	1
5	90503089	MOTOR & GEARBOX	1
6	419233-10	KEYLESS CHUCK	1
7	149518-01	SCREW	1
8	90507403	VSR SWITCH	1
9	90501716	NAMEPLATE	1
10	90501711	BRAND LABEL	1
11	5106167-00	SCREW	2
12	311993-00	SCREW	4
13	5146421-00	SCREW	2
14	90503048	REAR COVER	1
15	419581-01	BIT	1
16	5145496-00	SPRING	2
861	499124-16	KITBOX	1
866	HPB18	BATTERY	1
867	5102026-00	BATTERY CAP	1
871	5103069-10	CHARGER	1

COPYRIGHT© 2005. All Rights Reserved.
Parts list, pricing, and availability subject to change. Please visit www.dewaltservicenet.com for current parts information.