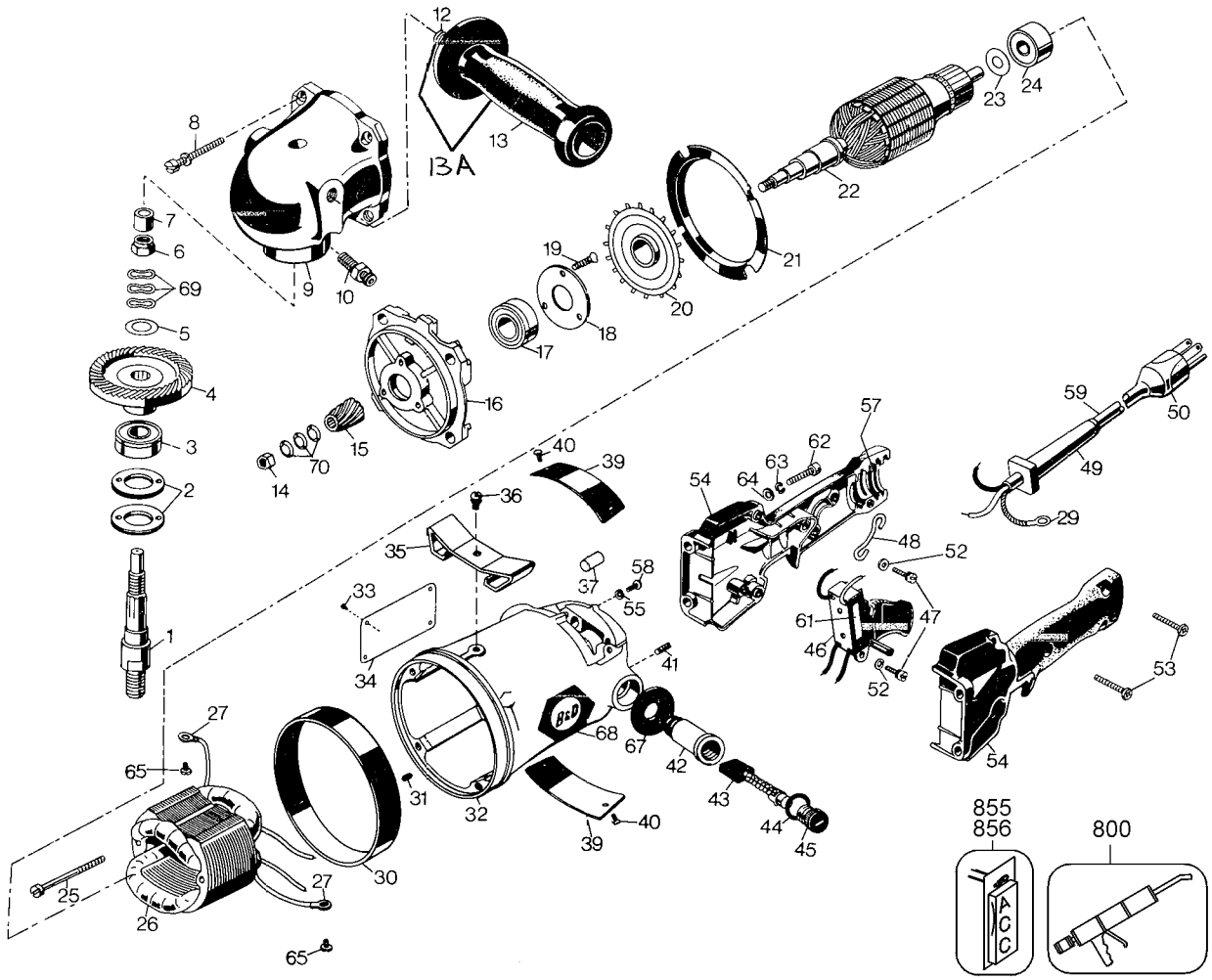
12
13
13A
8
7
6
69
5
4
3
2
1
9
10
19
18
17
20
21
22
23
24
16
15
14
70
40
39
36
35
33
34
37
58
55
41
68
67
42
43
44
45
32
31
30
27
65
25
26
57
62
63
64
54
48
52
47
61
46
59
50
49
29
53
855
856
800
A
C
C

Parts List for 4076 Type 1

Item Number	Part Number	Description	Qty Required
1	62299-00	SPINDLE	1
2	15782-00	RING,LOCKING	2
3	50706-00	BEARING,BALL	1
4	133062-01	GEAR	1
5	53506-00	WASHER	1
6	56902-01	NUT	1
7	21635-00	BEARING,NEEDLE	1
8	99461-28	SCREW	4
9	791658-00	CASE,GR & HDLE	1
10	133274-01	LOCK PIN	1
12	99173-36	SCREW	1
13	625712-00	SIDE HANDLE	1
14	24926-01	NUT	1
15	133065-00	PINION	1
16	000000-00	No Longer Available	1
17	50271-00	BEARING,BALL	1
18	131519-00	BEARING PLATE	2
19	94561-00	SCREW	4
20	450321-00	FAN	1
21	922772-00	BAFFLE,FAN	1
22	131490-31	ARMATURE & FAN	1
23	36390-00	WASHER	1
24	14201-00	BEARING,BALL	1
25	99446-42	SCREW	2
26	618551-00	FIELD	1
27	34289-00	TERMINAL	2
29	94593-03	TERMINAL	1

COPYRIGHT© 2005. All Rights Reserved.
Parts list, pricing, and availability subject to change. Please visit www.dewaltservicenet.com for current parts information.

Parts List for 4076 Type 1

Item Number	Part Number	Description	Qty Required
30	72999-00	RING	1
31	30612-00	PLUG	1
32	679885-00	FIELDCASE	1
33	3041-00	SCREW	4
34	000000-00	No Longer Available	1
35	000000-00	No Longer Available	1
36	000000-00	No Longer Available	1
37	85485-00	TUBE	2
39	36263-00	COVER	2
40	36285-00	SCREW	4
41	376-00	SCREW	2
42	000000-00	No Longer Available	1
43	131602-00	BRUSH&SPRING	2
44	96121-00	O RING	2
45	000000-00	No Longer Available	1
46	131004-00	SWITCH,TRIGGER	1
47	1789-00	SCREW	3
48	132319-01	CLAMP,CORD	2
49	62300-00	PROTECTOR,CORD	1
50	234900-00	PLUG 120V 3WIRE	1
52	99361-07	WASHER	3
53	96089-00	SCREW	5
54	429972-00	HANDLE ASSY.	1
54	283676-00	HANDLE ASSY,SW.	1
55	418-00	WASHER	1
57	131673-01	INSERT	5
58	2379-00	SCREW	2

COPYRIGHT© 2005. All Rights Reserved.
Parts list, pricing, and availability subject to change. Please visit www.dewaltservicenet.com for current parts information.

Parts List for 4076 Type 1

Item Number	Part Number	Description	Qty Required
59	50272-98	CORD/10FT./14-3	1
61	91172-00	LABEL	1
62	99433-14	SCREW	4
63	416-00	WASHER	4
64	82481-00	WASHER	4
65	132069-00	SCREW	2
67	131607-00	WASHER	2
68	000000-00	No Longer Available	1
69	48742-00	WASHER	3
70	48601-00	WASHER	3
113	86319-22	HANDLE,SIDE	1
113	939935-00	CASE, GEAR	1
113	939935-00	CASE, GEAR	1
800	429698-00	GREASE:4 LB CAN	1
855	000000-00	No Longer Available	1
856	DW4955	6-3/4 KOOL FLEX BACK	1

COPYRIGHT© 2005. All Rights Reserved.
Parts list, pricing, and availability subject to change. Please visit www.dewaltservicenet.com for current parts information.