PORTER-CABLE

FINISH NAILER

WARNING: Repairs should only be attempted by trained repairmen. Contact the nearest Porter-Cable Service Center or other competent repair center
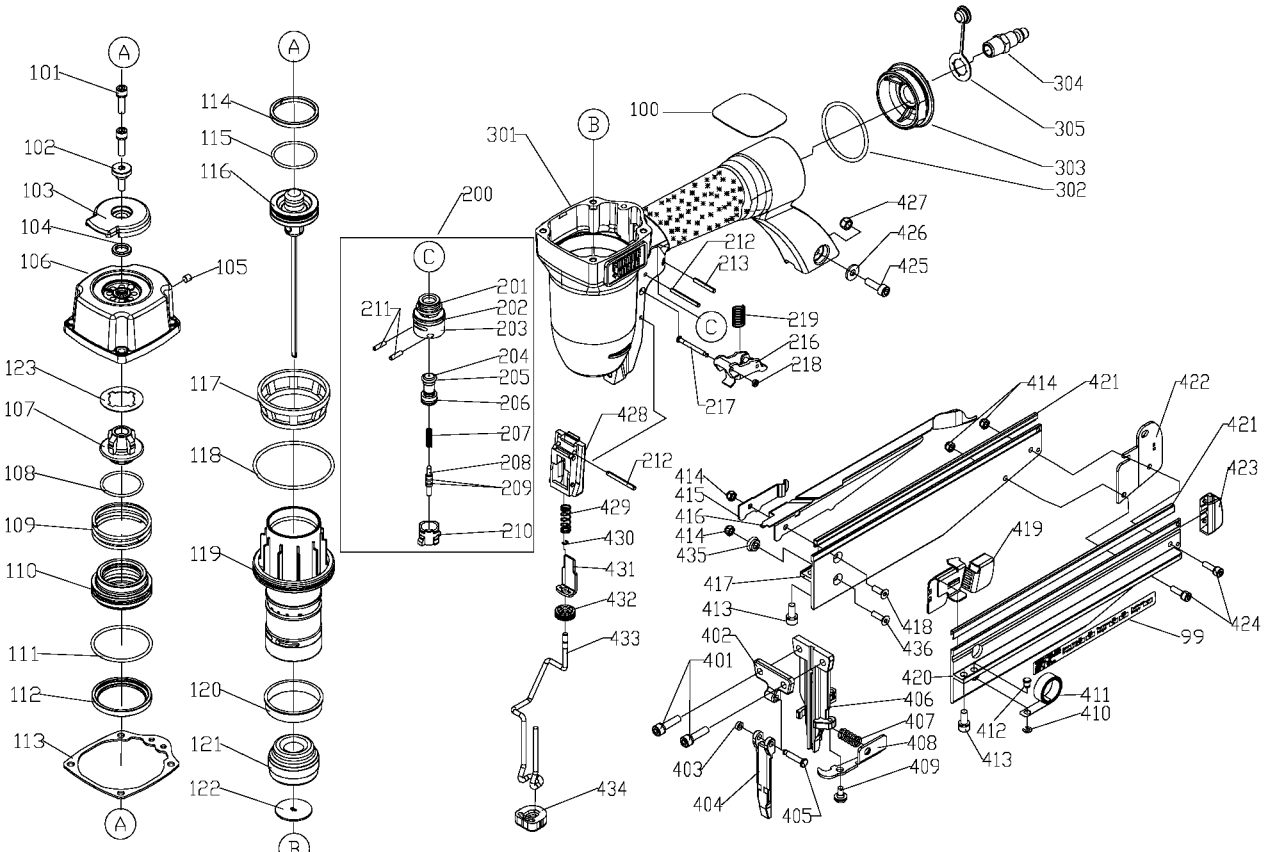
FN250B