PORTER-CABLE

CLIPPED HEAD FRAMING NAILER
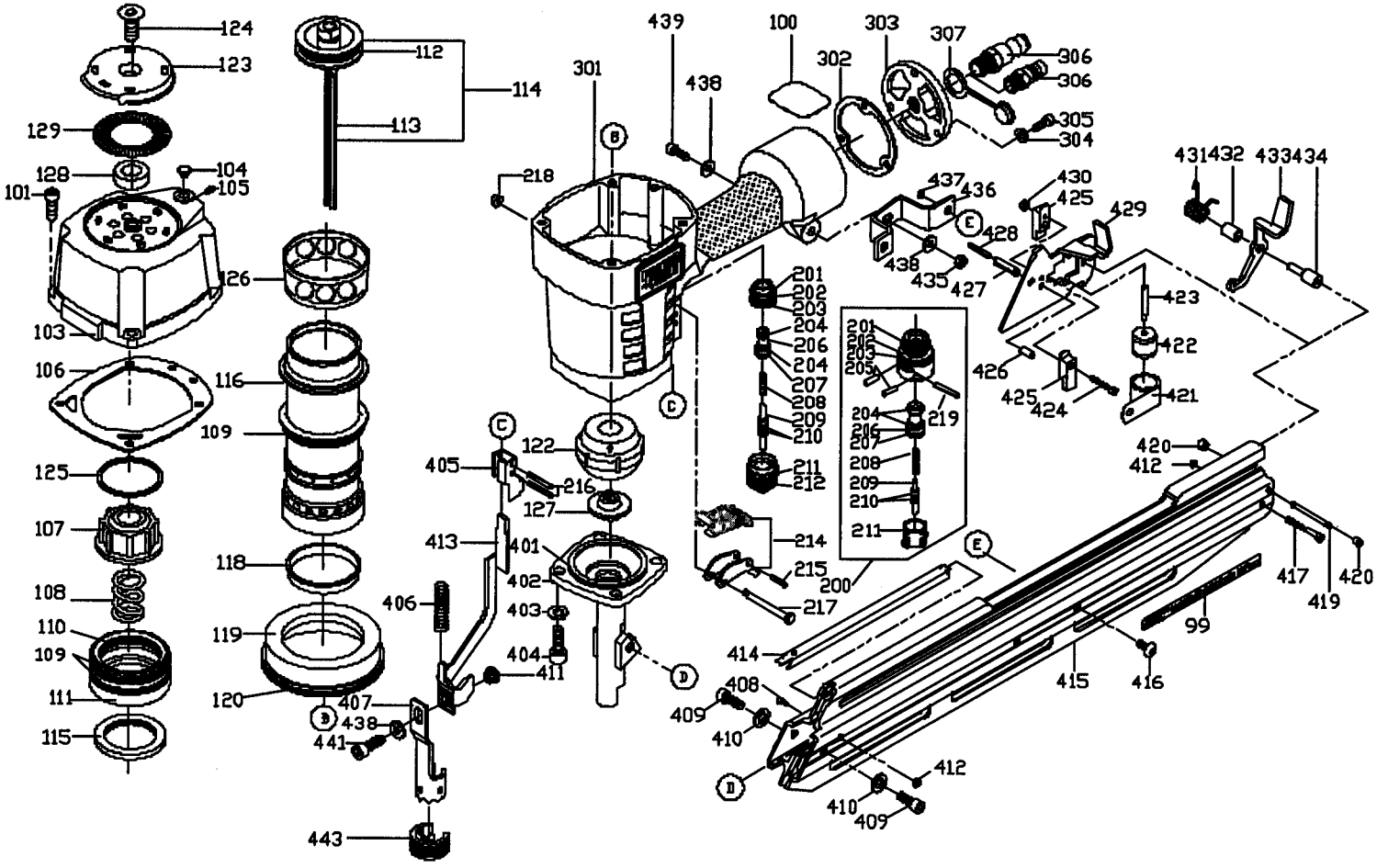
FC350