CP503-3
Oilfree
Air Compressor

DELTA ShopMaster
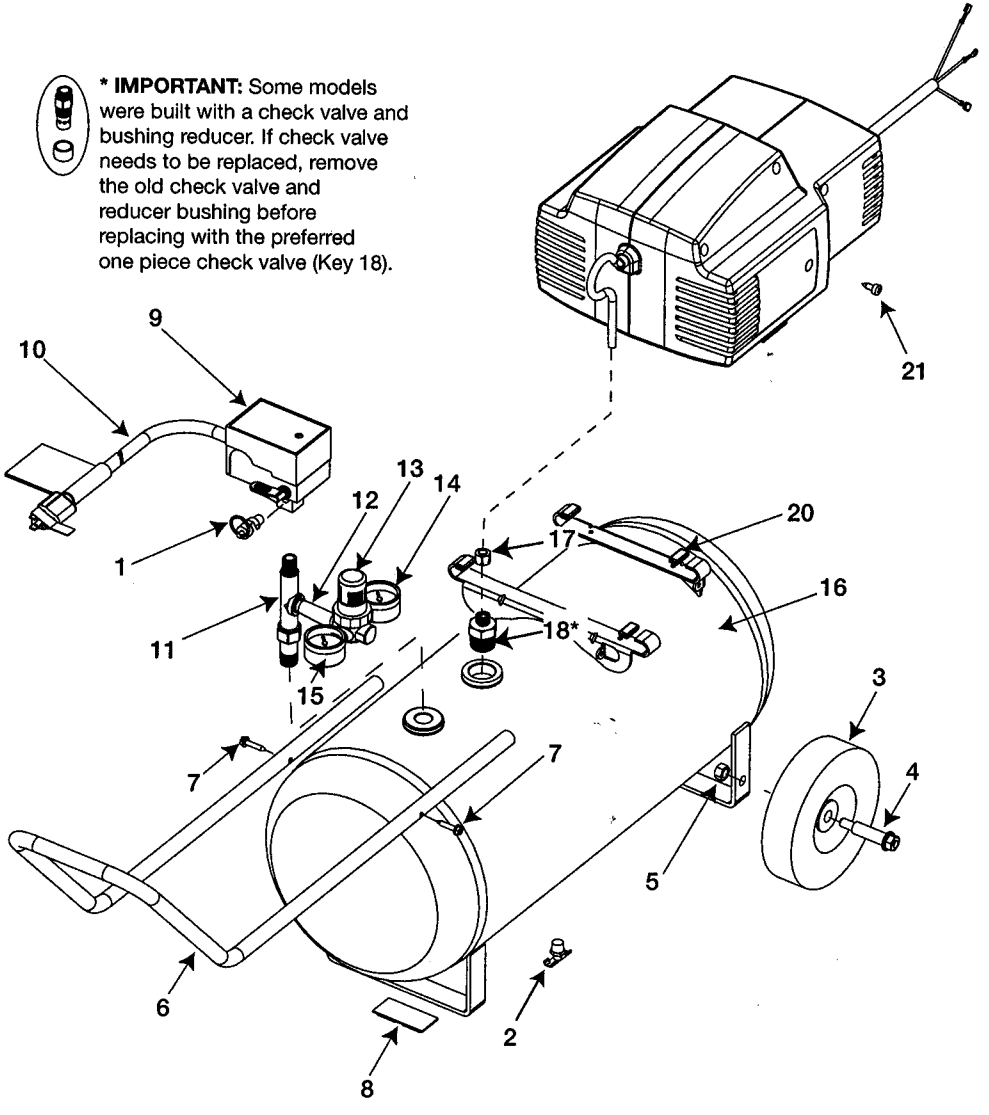
PART NO. A08624 r0
Date: 11/4/04