PORTER-CABLE

BN200
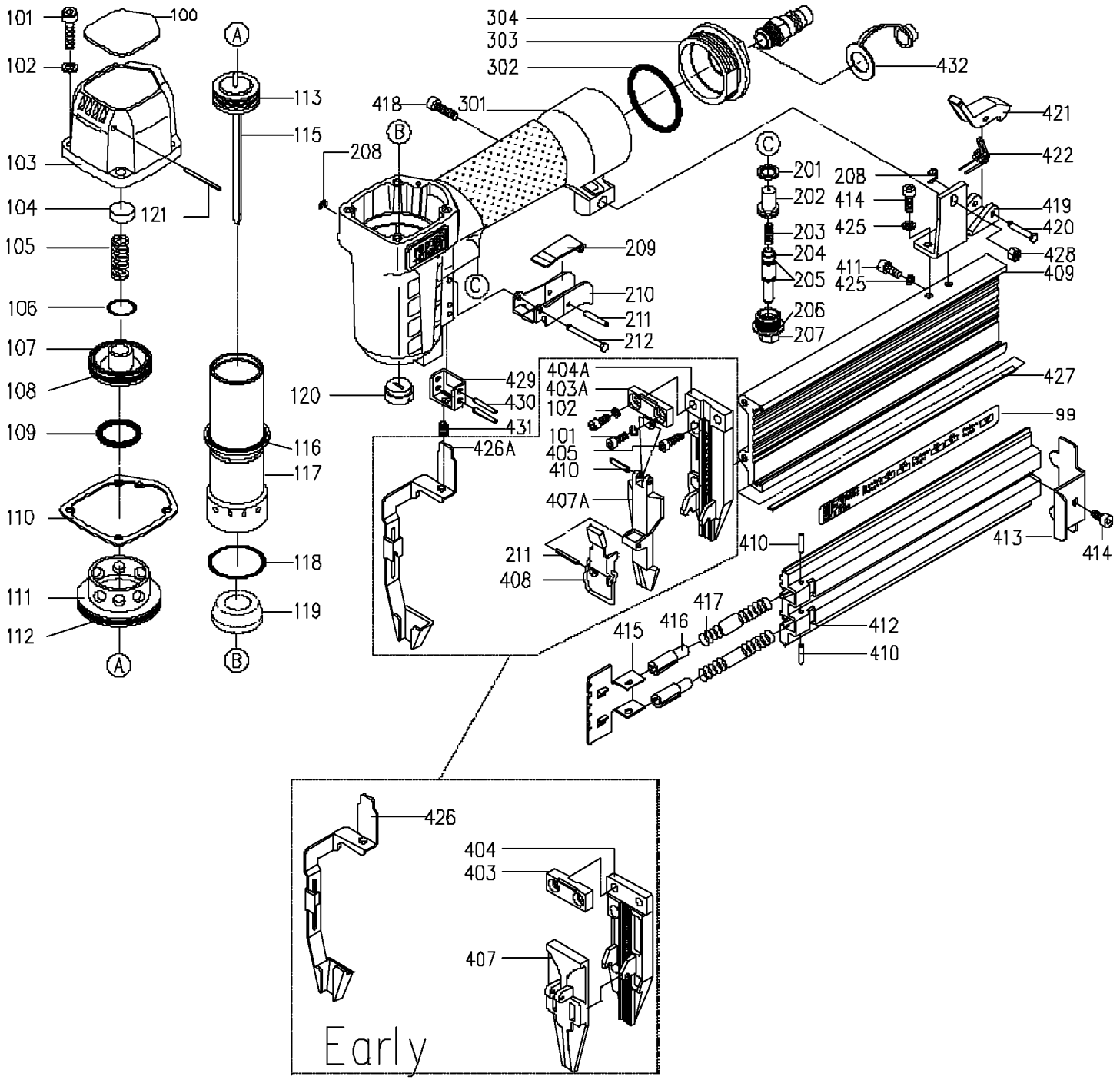
BRAD NAILER